City of Mt. Juliet Building Department

Residential Projects

Revised 01/16/2018

City of Mt. Juliet

Building Department

When Applying for a Residential Permit

For Residential House Permit the General Contractor will need to apply for both building permit and plumbing permits.

- Building permit application completed and signed turned into the Building Department. We will also need a copy of the contractor's State of Tennessee Contractor License and a Certificated of Liability Insurance for general liability listing the City of the Mt Juliet as the Certificate Holder.

- Plumbing permit application completed and signed by the General Contractor.

- Flood plain Information sheet filled out and completed.

- Erosion prevention and sediment control contract obtained at Storm Water Department – Donna Howard at (615) 773-6270.

- Sewer contract obtained at Finance Department / Sewer Billing – Wayne Griffin at (615) 754-2554.

- Adequate facilities tax receipt obtained from – Wilson County Codes Building Inspector's Office at (615) 444-3025.

- Recorded Final plat approved by Planning/Zoning Department – Jennifer Stewart at 615-773-6237.

- Building plans review are required for each permit applied for. All plans to be submitted electronically – Diana Thompson at 615-773-6225.

After the Building Permit has been issued the Sub-Contractor(s) can now apply for their permits: We will also need a copy of the contractor's State of Tennessee Contractor License and a Certificated of Liability Insurance for general liability listing the City of the Mt Juliet as the Certificate Holder.

- Electrical and Low Voltage permit application(s) completed and signed by electrical and/or low voltage contractors.

- Mechanical and HVAC permit applications completed and signed by mechanical/HVAC.

If you have any questions please contact the **Building Department at** (615) 773-6225.

2425 N. MT. JULIET RD. ● MT. JULIET, TN 37122 ● (615) 773-6225 ● FAX (615) 773-4511

City of Mt. Juliet

Building Department

PLOT PLAN REQUIREMENTS FOR
NEW RESIDENTIAL CONSTRUCTION AND
RESIDENTIAL BUILDING ADDITIONS

1. Plot plans are required for all new residential construction and additions to existing residential structures.

2. Drawing shall be drawn to scale with drawing scale indicated on the drawings.
   Example 1" = 20'

3. Drawings must completely show all existing structures including accessory structures.

4. Additions and/or accessory structures must be identified by highlighting, crosshatch or other means that distinguishes the addition from the existing structures.

5. Plans must be large enough to provide adequate dimensions of the structure and distances to lot lines. Minimum size of drawing accepted is 8 1/2" by 11" paper.

6. All dimensions must be shown for both the existing structure and any new construction including offsets and overhangs.

7. Show all property lines, setback lines, easements, elevation contours based on MSL datum, flood plain boundary, public utility crossings, and other existing encumbrances that may exist on or over the property.

8. For property encumbered by the floodplain and/or floodway (as shown on the most current FEMA Flood Insurance Rate Map documents), the following information shall be included on the drawing: Need to Rob Ealy – Flood Plain Manger at 615-773-6233.

   a. Flood Plain Elevation
   b. Existing Finished Floor Elevation (FFE)
   c. Finished Floor Elevation of any new structure and/or addition to an existing structure.

9. All distances to property lines must be shown for each corner and side of the existing and proposed structure, including any offsets.

10. Show street name, right of way width, and address of the subject property.

11. Need to be stamped by Surveyor

Loan Plat surveys which have lot dimensions, shape of structure and distances to property lines are acceptable documents with the inclusion of the above-listed information.

2425 N. MT. JULIET RD. ● MT. JULIET, TN 37122 ● (615) 773-6225 ● FAX (615) 773-4511

City of Mt. Juliet

Building Department

Plan Review Application

Original Submittal _____ Addendum/Change Order _____ Shop Drawings _____

PROJECT INFORMATION DATE: _____

Project Name: _____

Address: _____

Description of Work: _____

_____

Total Square Footage: _____ # Stories: _____ Sprinklered: Yes ☐ No ☐

Const. Type: _____ Occupancy Class: _____ Separated ☐ Non-separated ☐

If additional code information has already been provided as part of the submittal please indicate: ___

APPLICANT INFORMATION

Project Architect: _____ Phone: _____

Project Designer: _____ Phone: _____

Project Applicant: _____ Phone: _____

Contact Information: _____

_____

_____

Please provide an email and appropriate contact person if you would like plan review comments emailed to you. _____

ADDITIONAL INFORMATION

_____

_____

2425 N. MT. JULIET RD. • MT. JULIET, TN 37122 • (615) 773-6225 • FAX (615) 773-4511

CITY OF MT. JULIET

Department of Building Codes
2425 N. Mt. Juliet Road
Mt. Juliet, TN 37122
Phone: (615) 773-6225 Fax: (615) 773-4511

Directions for Submission of Electronic Plan Review

The URL for submitting plans electronically is:

https://cityofmtjuliet.exavault.com/share/view/wak-85tj30st

Log on to the site above, use the password: **Juliet** to log in. Then follow the directions to load your files.

Upon completion of your plan review, you will receive an email where you can retrieve your plans for correction or printing.

Along with a Plan Review Application, the following plans will need to be submitted:

Residential:

1. Architectural (Floor Plan Min.)
2. Mechanical (Show Location of HVAC Unit, Duct Types. Locations and Sizes).
3. Plumbing (Show Locations of all piping, Pipe Type, Size and Use.)
4. Electrical (Show all Switches, Receptacles, Luminaires, and Electrical Appliances, as well as the size of the Service, and number of circuits).
5. Manual J, S and D for HVAC System.
6. ResCheck or 2012 International Energy Code Compliance Sheet.

Commercial:

1. Architectural w/ details
2. Structural w/ details
3. Mechanical (Including Calculations, Condensation, Unit Brand, Size, Etc.)
4. Plumbing (Including Calculations for Domestic and Fire Water as well as Drain, Vent and Building Sewer).
5. Electrical (Regular and Low Voltage)
6. ComCheck (Energy Compliance)
7. Sprinkler Calculations / Shop Drawings (If Applicable)
8. Standpipe System (if Applicable).
9. Life Safety Plan (Emergency Lighting, Travel Distances, Alarms, Fire Extinguisher Size, Type and Location etc.)
10. Hood / Duct and Fire Suppression Drawings (if Applicable).

BUILDING PERMIT APPLICATION

CITY OF MT. JULIET - BUILDING DEPARTMENT

1

JOB ADDRESS | CITY / ZIP CODE

2

LOT NO. | SUBDIVISION / LOCATION

3

OWNER NAME | MAILING ADDRESS | CITY / ZIP CODE

PHONE | EMAIL

4

CONTRACTOR | MAILING ADDRESS | CITY / ZIP CODE

PHONE | LICENSE # | EMAIL

5

TYPE OF CONSTRUCTION: ☐ NEW ☐ ALTERATION ☐ CHANGE IN USE/OCCUPANCY ☐ DEMOLITION

6

PROPOSED USE: ☐ NON-RESIDENTIAL / COMMERCIAL ☐ APARTMENTS ☐ CONSTRUCTION / OFFICE TRAILER ☐ OTHER ☐ RETAINING WALL ☐ SINGLE FAMILY RESIDENCE ☐ TOWNHOME ☐ HOUSE TRAILER ☐ STORAGE BUILDING ☐ POOL ☐ GARAGE

7

SQ. FT. LIVING AREA _____ # OF STORIES _____

SQ. FT. GARAGE _____ # OF ROOMS _____

SQ. FT. BASEMENT _____ # OF BATH RMS _____

SQ. FT. COMM. / IND _____ # OF BED RMS _____

OF FIREPLACE _____

ESTIMATED COST OF CONSTRUCTION _____

PERMIT FEE _____ PLAN REVIEW FEE _____

IMPACT FEE _____ EXEMPTION FEE _____

REAR LOT LINE ☐ SEE ATTACHED PLOT PLAN

☐ CRITICAL LOT

SIDE LOT LINE

SIDE LOT LINE

FRONT LOT LINE

NOTICE

THIS PERMIT BECOMES NULL AND VOID IF WORK OR CONSTRUCTION AUTHORIZED IS NOT COMMENCED WITHIN 180 DAYS, OR IF CONSTRUCTION OR WORK IS SUSPENDED OR ABANDONED FOR A PERIOD OF 180 DAYS AT ANY TIME AFTER WORK IS COMMENCED.

I HEREBY CERTIFY THAT I HAVE READ AND EXAMINED THIS APPLICATION AND KNOW THE SAME TO BE TRUE AND CORRECT. ALL PROVISIONS OF LAWS AND ORDINANCES GOVERNING THIS TYPE OF WORK WILL BE COMPLIED WITH WHETHER SPECIFIED HEREIN OR NOT, THE GRANTING OF A PERMIT DOES NOT PRESUME TO GIVE AUTHORITY TO VIOLATE OR CANCEL THE PROVISIONS OF ANY OTHER STATE OR LOCAL LAW REGULATING CONSTRUCTION OR THE PERFORMANCE OF CONSTRUCTION.

8

SIGNATURE OF CONTRACTOR OR AUTHORIZED AGENT (DATE)

SIGNATURE OF OWNER (IF OWNER BUILDER) (DATE)

City of Mt. Juliet

Building Department

Flood Plain Information

Flood Plain Information sheet has to be filled out for new construction and additions.

Parcel Identity: Plat Book No. _____ Page No. _____

Map No. _____ Parcel No. _____

Lot No. _____ Subdivision _____

Property Address _____

FEMA FIRM Panel No. _____

Date: _____

Is the subject property located in or immediately adjacent to a special Flood Hazard Area (Zones: A, AO, AH, A1 – 30, AE, A99)?

Yes ☐ No ☐

If Yes, please provide the additional information:

The following documents shall be attached to the Permit Application:

- Elevation certificate
- Base flood elevation
- Minimum Finished floor elevation

_____ _____

Signature Date

_____

Title

2425 N. MT. JULIET RD. • MT. JULIET, TN 37122 • (615) 773-6225 • FAX (615) 773-4511

City of Mt. Juliet

Building Department

International Energy Conservation Code Worksheet

Street Address:_____ Lot No#_____ Subdivision_____

Type of Construction:_____ Occupancy Type:_____ Type Job: New__ Addition __ Remodel __

Foundation Type: Slab __ Crawl Space__ Roof Type: Shingle ___ Metal ___ Other_____

Component	Minimum R-Value Insulation	Proposed Design
Roof / Ceiling Uo= .030 (MAX)		
Flat Ceiling	R-38	R-_____
Cathedral Ceiling	R-38	R-_____
Floor Cantilever	R-38	R-_____
Floors Uo= .047 (MAX)		
Crawl Space	R-19	R-_____
Slab-on-Grade (Heated)*	R-10 (2 ft. Depth)	R-_____
(Un-Heated)	R-10 (2 ft. Depth)	R-_____
** Heated Slabs must also have R-5 rating on all slab edges.*		
Exterior Walls Uo= .082 (MAX)		
Wood Framed Walls	R-13	R-_____
Basement Walls (Continuous Insulation)	R-10	R-_____
(Framing Cavity Insulation)	R-13	R-_____
Crawl Space Wall (Continuous Insulation)	R-10	R-_____
(Framing Cavity Insulation)	R-13	R-_____
Mass Walls (i.e.,ICF, Etc.)	R-5	R-_____
Ceiling Uo= .030 (MAX)		
Ceiling / Attic	R-38	R-_____

Windows Uo= .040 (MAX)

Single Pane Wood _____	Single Pane Aluminum _____	Low E _____
Double Pane Wood _____	Double Pane Aluminum _____	Low E _____
Triple Pane Wood _____	Triple Pane Aluminum _____	Low E _____
Other _____		Low E _____

I hereby certify that I have read and examined this document and know the same to be true and correct. All provisions of laws and ordinances governing this type of work will be complied with whether specified herein or not. Granting of a permit does not presume to give authority to violate or cancel the provisions of any other state or local law regulating construction of the performance of construction.

_____ _____

Signature of Applicant / Contractor or Authorized Agent Date

2425 N. MT. JULIET RD. • MT. JULIET, TN 37122 • (615) 773-6225 • FAX (615) 773-4511

PLUMBING PERMIT APPLICATION

CITY OF MT. JULIET - BUILDING DEPARTMENT

1

JOB ADDRESS | CITY / ZIP CODE

2

LOT NO. | SUBDIVISION / LOCATION

3

OWNER NAME | MAILING ADDRESS | CITY / ZIP CODE

PHONE | EMAIL

4

CONTRACTOR | MAILING ADDRESS | CITY / ZIP CODE

PHONE | LICENSE # | EMAIL

5 PROPOSED USE: ☐ NON-RESIDENTIAL / COMMERCIAL ☐ SINGLE FAMILY RESIDENCE ☐ TOWNHOME ☐ APARTMENTS ☐ OTHER

6 CLASS OF WORK: ☐ NEW ☐ ADDITION ☐ ALTERATION ☐ REPAIR

7 DESCRIBE WORK:

8 ****100,000 BTU'S OR GREATER REQUIRE A STATE PERMIT (WATER HEATERS OR BOILERS)**

FILL OUT NUMBER OF FIXTURES

Number	Type of Fixture or Item	Fee amount	TOTAL FEE
	WATER CLOSET (TOILET)	X 9.25 Each	
	BATHTUB	X 9.25 Each	
	LAVATORY (WASH BASIN)	X 9.25 Each	
	SHOWER	X 9.25 Each	
	KITCHEN SINK & DISP.	X 9.25 Each	
	DISHWASHER	X 9.25 Each	
	LAUNDRY TRAY	X 9.25 Each	
	CLOTHES WASHER	X 9.25 Each	
	WATER HEATER	X 9.25 Each	
	URINAL	X 9.25 Each	
	DRINKING FOUNTAIN	X 9.25 Each	
	FLOOR DRAIN / FLOOR SINK	X 9.25 Each	
	MOP SINK / HAND SINK	X 9.25 Each	
	WATER LINE	X 38.50 Each	
	WATER PIPING / TREATING EQUIP.	X 9.25 Each	
	WASTE INTERCEPTOR	X 9.25 Each	
	VACUUM BREAKERS / HOSE BIBS	X 9.25 Each	
	LAWN SPRINKLER SYSTEM	X 9.25 Each	
	SEWER	X 38.50 Each	
	CESSPOOL	X 9.25 Each	
	SEPTIC TANK & PIT	X 9.25 Each	
	GREASE OR OTHER TRAP	X 9.25 Each	
	PRESSURE REDUCING VALVE	X 9.25 Each	
	OTHER	X 9.25 Each	
	BASE PERMIT FEE		75 . 00
	TOTAL FEE	**$**	

NOTICE

THIS PERMIT BECOMES NULL AND VOID IF WORK OR CONSTRUCTION AUTHORIZED IS NOT COMMENCED WITHIN 180 DAYS, OR IF CONSTRUCTION OR WORK IS SUSPENDED OR ABANDONED FOR A PERIOD OF 180 DAYS AT ANY TIME AFTER WORK IS COMMENCED.

I HEREBY CERTIFY THAT I HAVE READ AND EXAMINED THIS APPLICATION AND KNOW THE SAME TO BE TRUE AND CORRECT. ALL PROVISIONS OF LAWS AND ORDINANCES GOVERNING THIS TYPE OF WORK WILL BE COMPLIED WITH WHETHER SPECIFIED HEREIN OR NOT, THE GRANTING OF A PERMIT DOES NOT PRESUME TO GIVE AUTHORITY TO VIOLATE OR CANCEL THE PROVISIONS OF ANY OTHER STATE OR LOCAL LAW REGULATING CONSTRUCTION OR THE PERFORMANCE OF CONSTRUCTION.

9

SIGNATURE OF CONTRACTOR OR AUTHORIZED AGENT (DATE)

SIGNATURE OF OWNER (IF OWNER BUILDER) (DATE)

MECHANICAL / GAS PERMIT APPLICATION

CITY OF MT. JULIET - BUILDING DEPARTMENT

1	JOB ADDRESS		CITY / ZIP CODE
2	LOT NO.	SUBDIVISION / LOCATION	
3	OWNER NAME	MAILING ADDRESS	CITY / ZIP CODE
	PHONE	EMAIL	
4	CONTRACTOR	MAILING ADDRESS	CITY / ZIP CODE
	PHONE / LICENSE #	EMAIL	

5 PROPOSED USE: ☐ NON-RESIDENTIAL / COMMERCIAL ☐ SINGLE FAMILY RESIDENCE ☐ TOWNHOME ☐ APRTMENTS ☐ OTHER

6 CLASS OF WORK: ☐ NEW ☐ ADDITION ☐ ALTERATION ☐ REPAIR ☐ CHANGE OUT

7 DESCRIBE WORK:

8 **** 100,000 BTU'S OR GREATER REQUIRE A STATE PERMIT (WATER HEATERS OR BOILERS)**

RESIDENTIAL INSTALLATIONS:

No. of Units	Type of Fixture or Item
	SINGLE FAMILY DWELLING TOTAL TONS (_____)
	DUPLEX FAMILY DWELLING TOTAL TONS (_____)
	TOWNHOMES AND APARTMENTS TOTAL TONS (_____)

COMMERCIAL INSTALLATIONS:

No. of Units	Type of Fixture or Item
	NON-RESIDENTIAL / COMMERCIAL TOTAL TONS (_____)

GAS APPLIANCES:

Number	Type of Fixture or Item
	WATER HEATER
	FIRE PLACE
	OTHER GAS APPLIANCES

ESTIMATED COST _____ **PERMIT FEE**

NOTICE

THIS PERMIT BECOMES NULL AND VOID IF WORK OR CONSTRUCTION AUTHORIZED IS NOT COMMENCED WITHIN 180 DAYS, OR IF CONSTRUCTION OR WORK IS SUSPENDED OR ABANDONED FOR A PERIOD OF 180 DAYS AT ANY TIME AFTER WORK IS COMMENCED.

I HEREBY CERTIFY THAT I HAVE READ AND EXAMINED THIS APPLICATION AND KNOW THE SAME TO BE TRUE AND CORRECT. ALL PROVISIONS OF LAWS AND ORDINANCES GOVERNING THIS TYPE OF WORK WILL BE COMPLIED WITH WHETHER SPECIFIED HEREIN OR NOT, THE GRANTING OF A PERMIT DOES NOT PRESUME TO GIVE AUTHORITY TO VIOLATE OR CANCEL THE PROVISIONS OF ANY OTHER STATE OR LOCAL LAW REGULATING CONSTRUCTION OR THE PERFORMANCE OF CONSTRUCTION.

9

SIGNATURE OF CONTRACTOR OR AUTHORIZED AGENT (DATE)

SIGNATURE OF OWNER (IF OWNER BUILDER) (DATE)

ELECTRICAL PERMIT APPLICATION

CITY OF MT. JULIET - BUILDING DEPARTMENT

Applicant to complete numbered spaces only.

1 JOB ADDRESS | CITY / ZIP CODE

2 LOT NO. | SUBDIVISION / LOCATION

3 OWNER NAME | MAILING ADDRESS | CITY / ZIP CODE
PHONE | EMAIL

4 CONTRACTOR | MAILING ADDRESS | CITY / ZIP CODE
PHONE | LICENSE # | EMAIL

5 PROPOSED USE: ☐ NON-RESIDENTIAL / COMMERCIAL ☐ SINGLE FAMILY RESIDENCE ☐ TOWNHOME ☐ APRTMENT ☐ OTHER

6 CLASS OF WORK: ☐ NEW ☐ ALTERATION ☐ ADDITION ☐ REPAIR

7 UTILITIES: ☐ MTEMC ☐ NES

8 SERVICE SIZE:

9 SERVICE CONDUCTOR SIZE:

10 AVAIL. SHORT CIRCUIT CURRENT:

11 TYPE HEAT: ☐ ELECT. ☐ GAS ☐ PACKAGE ☐ SPLIT

12 WATER HEATER: ☐ ELECT. ☐ GAS

13 CLOTHES DRYER: ☐ ELECT. ☐ GAS

14 RANGE: ☐ ELECT. ☐ GAS

15 NIO. OF CIRCUITS: NO. OF DISCONNECTS

16 NUMBER OF RECEPTACLES:

17 OTHER ELECTRICAL APPLIANCES:

Type of Fixture or Item	Number	Fee Per Item	Fee Charged
Lighting: _____ / Receptacles: _____		$5.70 1st 10/Add .50 ea.	
Motor Size:_____ Dishwasher / Disposal		Based on Size Horse Power	
Water Heater Residential		$15.00 ea.	
Water Heater Commercial		$19.00 ea.	
Boiler Size: _____		Based on Size	
Electric Range Residential		$19.00 ea.	
Electric Range Commercial		$22.75 ea.	
Electric Clothes Dryer Residential		$9.50 ea.	
Electric Clothes Dryer Commercial		$13.50 ea.	
Electric HVAC Unit Size:_____		$40.00 ea.	
Electric Signs (Hardwired)		$19.00 ea.	
Portable Structures (Meal Wagon, etc.)		$19.00 ea.	
New Service (Including Increase or Relocate)		$11.50 ea.	
Install New Device / Wiring 220 Volt and up		$7.55 eac	
Switch Panel Size_____ Up to 200 amp		$9.50 ea.	
Switch Panel Size_____ 201 to 400		$19.00 ea.	
Switch Panel Size_____ 401 to 800		$28.50 ea.	
Switch Panel Size_____ 801 to 1600		$47.50 ea.	
Switch Panel Size_____ 1601 to 3000		$75.50 ea.	
Switch Panel Size_____ 3001 to 6000		$142.00 ea.	
Switch Panel Size_____ ea. Add. 100 amps		$2.85 ea.	
Temp.& Serv.Rel.Size _____ Up to 200 amp		$40.00 ea.	
Temp.& Serv.Rel.Size _____ 201 to 400		$50.00 ea.	
Temp.& Serv.Rel.Size _____ 401 to 600		$60.00 ea.	
Temp.& Serv.Rel.Size _____ 601 to 1000		$100.00 ea.	
Temp.& Serv.Rel.Size _____ Over 1001 amp		$350.00 ea.	
Emergency Re-Connect		$100.00 ea.	
Rough-in		$40.00 ea.	
Low Voltage - Residential Rough		$40.00 ea.	
Low Voltage - Commercial Rough		$100.00 ea.	
Final - Residential		$50.00 ea.	
Final - Non- Residential / Commercial / Low Voltage		$100.00 ea.	
Total Permit Fee	**Minimum Permit Fee**	**75.00**	

THIS PERMIT BECOMES NULL AND VOID IF WORK OR CONSTRUCTION AUTHORIZED IS NOT COMMENCED WITHIN 180 DAYS, OR IF CONSTRUCTION OR WORK IS SUSPENDED OR ABANDONED FOR A PERIOD OF 180 DAYS AT ANY TIME AFTER WORK IS COMMENCED.

I HEREBY CERTIFY THAT I HAVE READ AND EXAMINED THIS APPLICATION AND KNOW THE SAME TO BE TRUE AND CORRECT. ALL PROVISIONS OF LAWS AND ORDINANCES GOVERNING THIS TYPE OF WORK WILL BE COMPLIED WITH WHETHER SPECIFIED HEREIN OR NOT, THE GRANTING OF A PERMIT DOES NOT PRESUME TO GIVE AUTHORITY TO VIOLATE OR CANCEL THE PROVISIONS OF ANY OTHER STATE OR LOCAL LAW REGULATING CONSTRUCTION OR THE PERFORMANCE OF CONSTRUCTION.

18 SIGNATURE OF CONTRACTOR OR AUTHORIZED AGENT (DATE) | SIGNATURE OF OWNER (IF OWNER BUILDER) (DATE)

FIRE SUPPRESSION PERMIT APPLICATION

CITY OF MT. JULIET - BUILDING DEPARTMENT

Applicant to complete numbered spaces only.

1
JOB ADDRESS | CITY / ZIP CODE

2
LOT NO. | SUBDIVISION / LOCATION

3
OWNER NAME | MAILING ADDRESS | CITY / ZIP CODE
PHONE | EMAIL

4
CONTRACTOR | MAILING ADDRESS | CITY / ZIP CODE
PHONE | LICENSE # | EMAIL

5
PROPOSED USE: ☐ NON-RESIDENTIAL / COMMERCIAL ☐ SINGLE FAMILY RESIDENCE ☐ TOWNHOMES ☐ APARTMENTS ☐ OTHER

6
CLASS OF WORK: ☐ NEW ☐ ADDITION ☐ ALTERATION ☐ REPAIR

7
DESCRIBE WORK:

THE FOLLOWING INFORMATION MUST BE SUBMITTED FOR PLAN REVIEW TO THE EXTERNAL FTP FOR REIVEW.
https://cityofmtjuliet.exavault.com/share/view/wak-85tj30st
PASSWORD Juliet

	SHOP DRAWINGS OR HOOD DRAWINGS (WORKING DRAWINGS)
	SPRINKLER / HOOD CALCULATIONS (IF APPLICABLE)
	LIST OF EQUIPMENT TO BE USED, MAKE, MODEL AND TYPE
	FLOOR PLAN OF BUILDING, SHOWING ALL ROOMS AND AREAS

No.	TYPE OF FIXTURE OR ITEM		FEE
	SPRINKLER SYSTEMS - COMMERCIAL / NON-RESIDENTIAL	$1.00 per sprinkler head or $250 min	
	SPRINKLER SYSTEMS - RESIDENTIAL SINGLE FAMILY	X $25	
	HOOD SUPPRESSIONA SYSTEMS	X $100	
	OTHER SUPPRESSION SYSTEMS	X $100	
	FIRE PUMPS & RELATED EQUIP.	X $100	
	PRIVATE FIRE HYDRANTS	X $100	
	STANDPIPE SYSTEM	X $100	
	TOTAL FEE	**$**	

NOTICE

THIS PERMIT BECOMES NULL AND VOID IF WORK OR CONSTRUCTION AUTHORIZED IS NOT COMMENCED WITHIN 180 DAYS, OR IF CONSTRUCTION OR WORK IS SUSPENDED OR ABANDONED FOR A PERIOD OF 180 DAYS AT ANY TIME AFTER WORK IS COMMENCED.

I HEREBY CERTIFY THAT I HAVE READ AND EXAMINED THIS APPLICATION AND KNOW THE SAME TO BE TRUE AND CORRECT. ALL PROVISIONS OF LAWS AND ORDINANCES GOVERNING THIS TYPE OF WORK WILL BE COMPLIED WITH WHETHER SPECIFIED HEREIN OR NOT, THE GRANTING OF A PERMIT DOES NOT PRESUME TO GIVE AUTHORITY TO VIOLATE OR CANCEL THE PROVISIONS OF ANY OTHER STATE OR LOCAL LAW REGULATING CONSTRUCTION OR THE PERFORMANCE OF CONSTRUCTION.

8
SIGNATURE OF CONTRACTOR OR AUTHORIZED AGENT (DATE)
SIGNATURE OF OWNER (IF OWNER BUILDER) (DATE)

FIRE OPERATIONAL PERMIT APPLICATION

CITY OF MT. JULIET - BUILDING DEPARTMENT

Applicant to complete numbered spaces only.

1 JOB ADDRESS | CITY / ZIP CODE

2 LOT NO. | SUBDIVISION / LOCATION

3 OWNER NAME | MAILING ADDRESS | CITY / ZIP CODE

PHONE | EMAIL

4 CONTRACTOR | MAILING ADDRESS | CITY / ZIP CODE

PHONE | LICENSE # | EMAIL

5 PROPOSED USE: ☐ NON-RESIDENTIAL / COMMERCIAL ☐ SINGLE FAMILY RESIDENCE ☐ TOWNHOMES ☐ APARTMENTS ☐ OTHER

6 CLASS OF WORK: ☐ NEW ☐ ADDITION ☐ ALTERATION ☐ REPAIR

7 DESCRIBE WORK:

THE FOLLOWING INFORMATION MUST BE SUBMITTED FOR PLAN REVIEW TO THE EXTERNAL FTP FOR REIVEW.
https://cityofmtjuliet.exavault.com/share/view/wak-85tj30st
PASSWORD Juliet

No.	TYPE OF FIXTURE OR ITEM		FEE
	ALARM SYSTEMS	.02 PER SQ FT OR $100 MIN	
	COMPRESSED GASES / *LP-GAS	X $100	
	COVERED MALL BUILDINGS	X $100	
	CUTTING AND WELDING	X $100	
	EXPLOSIVES	X $100	
	*FIREWORKS (DISPLAY)	X $100	
	FLAMMABLE & COMBUSTIBLE LIQUI	X $100	
	TAR KETTLES	X $100	
	HAZARDOUS CHEMICALS	X $100	
	HIGH PILED COMBUSTIBLE STOCK	X $100	
	TENTS OR AIR SUPPORTED STRUC	X $100	
	AEROSOL PRODUCTS	X $100	
	*UNDERGROUND STRORAGE TANK	X $100	
	OXIDIZERS & ORGANIC PEROXIDES	X $100	
	AMUSEMENT BUILDINGS	X $100	
	CARNIVALS & FAIRS / EXHIBITS & TF	X $100	
	OTHER	X $100	
	TOTAL FEE	**$**	

NOTICE

THIS PERMIT BECOMES NULL AND VOID IF WORK OR CONSTRUCTION AUTHORIZED IS NOT COMMENCED WITHIN 180 DAYS, OR IF CONSTRUCTION OR WORK IS SUSPENDED OR ABANDONED FOR A PERIOD OF 180 DAYS AT ANY TIME AFTER WORK IS COMMENCED.

I HEREBY CERTIFY THAT I HAVE READ AND EXAMINED THIS APPLICATION AND KNOW THE SAME TO BE TRUE AND CORRECT. ALL PROVISIONS OF LAWS AND ORDINANCES GOVERNING THIS TYPE OF WORK WILL BE COMPLIED WITH WHETHER SPECIFIED HEREIN OR NOT, THE GRANTING OF A PERMIT DOES NOT PRESUME TO GIVE AUTHORITY TO VIOLATE OR CANCEL THE PROVISIONS OF ANY OTHER STATE OR LOCAL LAW REGULATING CONSTRUCTION OR THE PERFORMANCE OF CONSTRUCTION.

8

SIGNATURE OF CONTRACTOR OR AUTHORIZED AGENT (DATE)

SIGNATURE OF OWNER (IF OWNER BUILDER) (DATE)

City of Mt. Juliet

Building Department

Adequate Facilities Tax

To: All Builders, Developers, and Contractors

Please be advised effective November 1, 2003 you will need to apply for an Adequate Facilities Tax Certificate prior to apply for a Building Permit.

This applies to **All** New Dwellings, Commercial and Industrial Buildings

Fees are calculated as such: Revised – November 2004

New Dwellings	$3,000.00
Commercial and Industrial	Equal to the Building Permit Amount. (No less that $1,000.00)

You may apply for the Adequate Facilities Tax at the following building.

Wilson County Building Inspector's Dept.
223 East Gay Street
Lebanon, TN 37087
Phone (615) 444-3025

If you have any questions please contact the **Building Department** at (615) 773-6225.

ORDINANCE 2018 - 1

AN ORDINANCE TO ADOPT AND AMEND ORDINANCE 2011-41 FEES FOR BUILDING CONSTRUCTION, PLAN REVIEW, AND PERMITTING; AND TO CREATE A MECHANISM FOR PERIODIC ADJUSTMENT TO SAID FEES

WHEREAS, Tennessee Code Annotated §§'s 6-54-501 through 6-54-510 authorizes municipalities to adopt building and fire codes by reference; and,

WHEREAS, it is in the City's interest to adopt a fee schedule for all building construction and review processes performed by the staff and to adopt a mechanism for periodic adjustment to said fees; and,

WHEREAS, the City of Mt Juliet provides certain services and incurs certain costs with the development and maintenance of property within the City, including the cost of permit preparation and administration, plan review, inspections and other services; and.

WHEREAS, the City Commission deems it necessary and appropriate that these fees adequately reflect the costs associated with these services,

BE IT THEREFORE ORDAINED by the Board of Commissioners for the City of Mt Juliet, Wilson County, Tennessee that:

SECTION 1. That the Mt. Juliet Municipal Code known as "Chapter 26, Article VII, BUILDING CONSTRUCTION, PLAN REVIEW, and INSPECTION FEES" be amended to read as follows:

SECTION 2. A Building Permit Fee for Residential and Non-Residential Construction and is adopted as follows:

For Residential, Decks, Miscellaneous, Remodels and Renovation Construction the fees shall be determined by Fee Schedule number 1.

FEE SCHEDULE NUMBER 1

TOTAL VALUATION*	FEE
$1,000.00 and Less	$15.00 fee for each inspection shall be charged. Minimum charge of $50.00.
$1,001.00 to $50,000.00	$15.00 for the first $1,000 plus $5.00 for each additional 1,000 or fraction thereof, to and including $50,000. Minimum charge of $50.00
$50,001.00 to $100,000.00	$260.00 for the first $50,000 plus $4.00 for each additional 1,000 or fraction thereof, to and including $100,000.
$100,001.00 to $500,000.00	$460.00 for the first $100,000 plus $3.00 for each additional 1,000 or fraction thereof, to and including $500,000.
$500,001.00 and Up	$1660.00 for the first $500,000 plus $2.00 for each additional 1,000 or fraction thereof.

***Valuation shall be determined by the most current published "Building Valuation Data" (without the regional modifier) as published by the International Code Council on their website, www.iccsafe.org.**

For all Non-Residential New Construction the fees shall be determined by Fee Schedule number 2.

FEE SCHEDULE NUMBER 2

Buildings Size in Square Footage	**Permit Fee**
10,000 sq. ft. or less	$.40 per sq. ft.
10,001 - 30,000 sq. ft.	$.30 per sq. ft.
30,001 - 50,000 sq. ft.	$.25 per sq. ft.
50,001 - 100,000 sq. ft.	$.20 per sq. ft.
100,001 - 200,000 sq. ft.	$.11 per sq. ft.
200,001 - 400,000 sq. ft.	$.09 per sq. ft.
400,001 sq. ft. or greater	$.05 per sq. ft.

SECTION 3. A Plan Review Fee shall be charged for all construction is adopted as follows: Residential Construction the Plan Review Fee shall be equal to 1/2 (one-half) the Building Permit Fee. Non-Residential Construction the Plan Review Fee shall be equal to the Building Permit Fee.

SECTION 4. A Plumbing Permit Fee for all Construction is adopted as follows:

Plumbing Permit Base Fee:	$75.00, plus,
Cost per each additional Fixture of	$ 9.25 each fixture, plus
Sewer Connection Fee:	$38.50 (if applicable), plus
Water Connection Fee:	$38.50 (if applicable)

SECTION 5. A Mechanical Permit Fee for all Construction is adopted as follows:

Residential Mechanical Permit Base Fee: $75.00, plus
Cost of each additional Fixture of $10.00 each fixture, plus
Water Heater Fee: $19.00 (if applicable)
Residential Dwellings (per unit if Multi-Family)

Mechanical Permit Base Fee Non- Residential: $75.00 for the first thousand ($1,000), plus $8.00 for each additional $1,000 or fraction thereof.

SECTION 6. An Electrical Permit Fee for all Construction is adopted as follows:

1. For Lighting Circuits or any other circuit where the outlets are intended to be install for low-voltage devices or lamp-holding devices or receptacles for the attachment of small portable electrical devices and appliances; 130 volts or less:

	a.	For the installation of 10 or less such outlets	$ 5.70
	b.	For additional outlets over 10, each	$ .50
2.	Motors and generators:		
	a.	One horsepower or less, each	$ 2.00
	b.	over 1 and including 10 horsepower, each	$ 7.55
	c.	Over 10 horsepower, each	$13.25

	d.	Motor-Generator Sets, each	$19.00
3.	Electric ranges:		
	a.	Residential, each	$19.00
	b.	Commercial, each	$22.75
4.	Water heaters:		
	a.	Residential, each	$15.00
	b.	Commercial, each	$19.00
5.	Electrical heat and electrically heated appliances other than ranges and water heaters:		
	a.	Over 1 kw and including 5 kw, each	$ 7.55
	b.	Over 5 kw and including 10 kw, each	$13.25
	c.	Over 10 kw, each	$19.00
	d.	HVAC, each air handling unit	$40.00
6.	Electric Dryers:		
	a.	Residential, each	$ 9.50
	b.	Commercial, each	$13.50
7.	Electric Signs (excluding service), each		$19.00
8.	Lunch wagons, bookmobiles, medical service vehicles, and similar structures on wheels, for lighting only		$19.00
9.	Service, new installation, increasing size, or relocation, per meter		$11.50
10.	Installation of any wiring, device, apparatus, appliance or equipment not specifically covered herein, such as but not limited to disconnects, 220 volt receptacles, each		$7.55
11.	Distribution, lighting or switch panels:		
	a.	Up to, and including 200 amperes, each	$ 9.50
	b.	201 to 400 amperes, each	$ 19.00
	c.	401 to 800 amperes, each	$ 28.50
	d.	801 to 1600 amperes, each	$ 47.50
	e.	1601 to 3000 amperes, each	$ 75.50
	f.	3001 to 6000 amperes, each	$142.00
	Each additional 100 amperes or fraction thereof		$ 2.85
13.	Temporary Poles and Service Releases:		
	a.	0 to 200 amperes	$ 40.00
	b.	201 to 400 amperes	$ 50.00
	c.	401 to 600 amperes	$ 60.00
	d.	601 to 1,000 amperes	$100.00
	e.	Over 1,000 amperes	$350.00
14.	Low Voltage		
	a.	Commercial, per inspection	$100.00
	b.	Residential, per inspection	$ 40.00
15.	Occupancy Final		
	a.	Commercial, per inspection	$100.00
	b.	Residential, per inspection	$ 50.00
16.	Emergency Re-connection of service, each		$100.00

17.	Consultation Fee	$ 30.00
18.	Rough-In	$ 40.00
19.	Minimum Fee (Including permit for the installation of any electrical system or part thereof, including but not limited to the installation of both new electrical systems and additions, alterations and repairs to existing electrical systems, the installation of electrical fixtures, equipment, devices and appurtenances thereto, temporary services, etc.)	$ 75.00

SECTION 7. A Demolition Permit Fee for all Construction is adopted as follows:

For a Residential Single Family Dwelling the Fee shall be $ 125.00

For all other Demolition the Fee shall be: 0 to 100,000 cubic feet $125.00
100,000 cubic feet and up $125.00 plus $.50 per thousand cubic feet or fraction thereof

SECTION 8. A Swimming Pool Permit Fee for all Construction is adopted as follows:

For an above ground residential private pool the fee shall be $ 50.00

For all other pools the fee shall be based upon the contract or purchase price based upon Fee Schedule Number 1 of this ordinance.

SECTION 9. A Fire Code System Permit Fee for all Construction is adopted as follows:

For a Residential Single Family Dwelling the Fee shall be: $25.00

For all other structures the Base Fee shall be: $250.00 or $1.00 per sprinkler head or suppression fixture (Whichever is greater).

All other Construction or Operation Permits required by the International Fire Code $100.00 each event or annually as needed.

SECTION 10. A Structure Moving Permit Fee for all Construction is adopted as follows:

A Fee for the moving of a structure into, out of, or through the city shall be: $100.00 plus any fees charged by the Regional Planning Commission (if required).

SECTION 11. Any person who commences any work on a building, structure, electrical, gas, mechanical, plumbing or fire suppression system prior to obtaining the appropriate permits, shall be subject to a penalty of 100% of the usual Permit Fee in addition to the required permit fees. (i.e. triple the permit fee)

SECTION 12. If any construction work that requires an inspection, does not meet the minimum standards and fails inspection shall be subject to a re-inspection fee as follows:

For the first failed inspection the fee shall be $ 50.00
For each subsequent failed inspection after the first the fee shall be $100.00 each inspection.
This fee must be paid prior to re-inspection being performed unless other arrangements are made with the Building Official.

SECTION 13. If the construction must comply with the requirements for review by the Tennessee Department of Commerce and Insurance as provided for in Rule 0780-02-03, and the plans must be reviewed and permits issued by the City of Mt Juliet, an additional plan review fee of Two Hundred Fifty Dollars ($250) plus Two Dollars and Fifty Cents ($2.50) per each one thousand dollars ($1,000) or fraction thereof, based on valuation of construction, will be added to the above fees.

BE IT FURTHER ORDAINED:

In the case of conflict between this Ordinance and any part hereof, in the whole or part of any existing Ordinance of the city, the conflicting Ordinance is repealed to the extent of the conflict but no further.

If any section, clause, provision or portion of this Ordinance is held to be invalid or unconstitutional by any court of competent jurisdiction, such holding shall not affect any other section, clause, provision or portion of this Ordinance.

This Ordinance shall take effect upon the earliest date allowed by law.

PASSED: 01/08/2018

Ed Hagerty, Mayor

FIRST READING: 12/11/17 _____

SECOND READING: 1/8/18 _____

ATTEST:

Sheila S. Luckett, MMC City Recorder

APPROVED AS TO FORM:

City Manager Kenneth D. Martin

City Attorney L. Gino Marchetti, Jr.

INTERNATIONAL CODE COUNCIL

People Helping People Build a Safer World

Building Valuation Data – FEBRUARY 2017

The International Code Council is pleased to provide the following Building Valuation Data (BVD) for its members. The BVD will be updated at six-month intervals, with the next update in August 2017. ICC strongly recommends that all jurisdictions and other interested parties actively evaluate and assess the impact of this BVD table before utilizing it in their current code enforcement related activities.

The BVD table provides the "average" construction costs per square foot, which can be used in determining permit fees for a jurisdiction. Permit fee schedules are addressed in Section 109.2 of the 2015 *International Building Code* (IBC) whereas Section 109.3 addresses building permit valuations. The permit fees can be established by using the BVD table and a Permit Fee Multiplier, which is based on the total construction value within the jurisdiction for the past year. The Square Foot Construction Cost table presents factors that reflect relative value of one construction classification/occupancy group to another so that more expensive construction is assessed greater permit fees than less expensive construction.

ICC has developed this data to aid jurisdictions in determining permit fees. It is important to note that while this BVD table does determine an estimated value of a building (i.e., Gross Area x Square Foot Construction Cost), this data is only intended to assist jurisdictions in determining their permit fees. This data table is not intended to be used as an estimating guide because the data only reflects average costs and is not representative of specific construction.

This degree of precision is sufficient for the intended purpose, which is to help establish permit fees so as to fund code compliance activities. This BVD table provides jurisdictions with a simplified way to determine the estimated value of a building that does not rely on the permit applicant to determine the cost of construction. Therefore, the bidding process for a particular job and other associated factors do not affect the value of a building for determining the permit fee. Whether a specific project is bid at a cost above or below the computed value of construction does not affect the permit fee because the cost of related code enforcement activities is not directly affected by the bid process and results.

Building Valuation

The following building valuation data represents average valuations for most buildings. In conjunction with IBC Section 109.3, this data is offered as an aid for the building official to determine if the permit valuation is underestimated. Again it should be noted that, when using this data, these are "average" costs based on typical construction methods for each occupancy group and type of construction. The average costs include foundation work, structural and nonstructural building components, electrical, plumbing, mechanical and interior finish material. The data is a national average and does not take into account any regional cost differences. As such, the use of Regional Cost Modifiers is subject to the authority having jurisdiction.

Permit Fee Multiplier

Determine the Permit Fee Multiplier:

1. Based on historical records, determine the total annual construction value which has occurred within the jurisdiction for the past year.
2. Determine the percentage (%) of the building department budget expected to be provided by building permit revenue.
3.

$$\text{Permit Fee Multiplier} = \frac{\text{Bldg. Dept. Budget x (\%)}}{\text{Total Annual Construction Value}}$$

Example

The building department operates on a $300,000 budget, and it expects to cover 75 percent of that from building permit fees. The total annual construction value which occurred within the jurisdiction in the previous year is $30,000,000.

$$\text{Permit Fee Multiplier} = \frac{\$300{,}000 \times 75\%}{\$30{,}000{,}000} = 0.0075$$

Permit Fee

The permit fee is determined using the building gross area, the Square Foot Construction Cost and the Permit Fee Multiplier.

Permit Fee = Gross Area x Square Foot Construction Cost
X Permit Fee Multiplier

Example

Type of Construction: IIB
Area: 1st story = 8,000 sq. ft.
2nd story = 8,000 sq. ft.
Height: 2 stories
Permit Fee Multiplier = 0.0075
Use Group: B

1. Gross area:
   Business = 2 stories x 8,000 sq. ft. = 16,000 sq. ft.
2. Square Foot Construction Cost:
   B/IIB = $161.91/sq. ft.
3. Permit Fee:
   Business = 16,000 sq. ft. x $161.91/sq. ft x 0.0075
   = $19,429

Important Points

- The BVD is not intended to apply to alterations or repairs to existing buildings. Because the scope of alterations or repairs to an existing building varies so greatly, the Square Foot Construction Costs table does not reflect accurate values for that purpose. However, the Square Foot Construction Costs table can be used to determine the cost of an addition that is basically a stand-alone building which happens to be attached to an existing building. In the case of such additions, the only alterations to the existing building would involve the attachment of the addition to the existing building and the openings between the addition and the existing building.

- For purposes of establishing the Permit Fee Multiplier, the estimated total annual construction value for a given time period (1 year) is the sum of each building's value (Gross Area x Square Foot Construction Cost) for that time period (e.g., 1 year).

- The Square Foot Construction Cost does not include the price of the land on which the building is built. The Square Foot Construction Cost takes into account everything from foundation work to the roof structure and coverings but does not include the price of the land. The cost of the land does not affect the cost of related code enforcement activities and is not included in the Square Foot Construction Cost.

Square Foot Construction Costs [a, b, c]

Group (2015 International Building Code)	IA	IB	IIA	IIB	IIIA	IIIB	IV	VA	VB
A-1 Assembly, theaters, with stage	229.26	221.37	216.01	207.16	194.94	189.29	200.61	178.00	171.48
A-1 Assembly, theaters, without stage	210.11	202.22	196.86	188.01	175.94	170.29	181.46	158.99	152.48
A-2 Assembly, nightclubs	179.28	174.08	169.68	162.81	153.48	149.24	157.08	138.97	134.26
A-2 Assembly, restaurants, bars, banquet halls	178.28	173.08	167.68	161.81	151.48	148.24	156.08	136.97	133.26
A-3 Assembly, churches	212.12	204.22	198.87	190.01	178.14	172.49	183.47	161.20	154.68
A-3 Assembly, general, community halls, libraries, museums	176.94	169.04	162.69	154.83	141.96	137.30	148.28	125.01	119.50
A-4 Assembly, arenas	209.11	201.22	194.86	187.01	173.94	169.29	180.46	156.99	151.48
B Business	182.98	176.21	170.40	161.91	147.69	142.14	155.55	129.66	123.97
E Educational	194.27	187.38	182.00	173.88	162.37	154.12	167.88	141.89	137.57
F-1 Factory and Industrial, moderate hazard	109.64	104.60	98.57	94.77	85.03	81.17	90.78	71.30	66.75
F-2 Factory and Industrial, low hazard	108.64	103.60	98.57	93.77	85.03	80.17	89.78	71.30	65.75
H-1 High Hazard, explosives	102.63	97.58	92.55	87.75	79.22	74.36	83.76	65.48	N.P.
H234 High Hazard	102.63	97.58	92.55	87.75	79.22	74.36	83.76	65.48	59.94
H-5 HPM	182.98	176.21	170.40	161.91	147.69	142.14	155.55	129.66	123.97
I-1 Institutional, supervised environment	183.95	177.72	172.57	165.30	152.29	148.15	165.39	136.43	132.19
I-2 Institutional, hospitals	307.93	301.16	295.35	286.86	271.68	N.P.	280.50	253.65	N.P.
I-2 Institutional, nursing homes	213.36	206.59	200.78	192.29	179.07	N.P.	185.93	161.04	N.P.
I-3 Institutional, restrained	208.19	201.43	195.62	187.12	174.39	167.85	180.76	156.37	148.68
I-4 Institutional, day care facilities	183.95	177.72	172.57	165.30	152.29	148.15	165.39	136.43	132.19
M Mercantile	133.57	128.37	122.97	117.10	107.27	104.03	111.38	92.75	89.05
R-1 Residential, hotels	185.63	179.39	174.24	166.97	153.72	149.58	167.06	137.86	133.61
R-2 Residential, multiple family	155.74	149.50	144.35	137.09	124.57	120.43	137.17	108.71	104.47
R-3 Residential, one- and two-family [d]	145.23	141.28	137.64	134.18	129.27	125.87	131.94	120.96	113.85
R-4 Residential, care/assisted living facilities	183.95	177.72	172.57	165.30	152.29	148.15	165.39	136.43	132.19
S-1 Storage, moderate hazard	101.63	96.58	90.55	86.75	77.22	73.36	82.76	63.48	58.94
S-2 Storage, low hazard	100.63	95.58	90.55	85.75	77.22	72.36	81.76	63.48	57.94
U Utility, miscellaneous	78.63	74.24	69.76	66.20	59.84	55.88	63.23	47.31	45.09

a. Private Garages use Utility, miscellaneous
b. For shell only buildings deduct 20 percent
c. N.P. = not permitted
d. Unfinished basements (Group R-3) = $21.00 per sq. ft.

ORDINANCE 98-16

AN ORDINANCE ADOPTING IMPACT FEES FOR RESIDENTAL DEVELOPMENT IN THE CITY OF MT. JULIET AND TO PLACE IN EFFECT THE PROVISIONS OF TENNESSEE SENATE BILL No. 3007.

BE IT ORDAINED by the City of Mt. Juliet, Wilson County, Tennessee as follows:

Section 1. The Board of Commissioners of the City of Mt. Juliet hereby finds that:

(a) New residential development imposes increased and excessive demands upon City facilities.

(b) Studies show that new development overburdens existing public facilities and that tax revenues generated from new development do not generate sufficient funds to provide public facilities to serve new development.

(c) Planning, economic and demographic studies project that new development will continue and will place ever-increasing demands on the City to provide public facilities to serve new development.

(d) The development potential and property values of properties in the designated benefit areas are strongly influenced by City policy as expressed in the comprehensive plan and as implemented by the City zoning ordinance and map.

(e) To the extent that new development in designated benefit areas place demands upon the public facilities, those demands should be satisfied by shifting the responsibility for financing the provision of such facilities from the public to the development creating the demands.

(f) The City is responsible for and is committed to providing public facilities at levels necessary to cure any existing deficiencies in already developed areas.

(g) Impact fees collected pursuant to this Ordinance may not be used to cure existing deficiencies in public facilities.

(h) The Board finds that there is a need for transportation related projects anticipated to be funded, in part, by this tax and adopts the Master Plan and Route Plan which indicate the need for and costs of public transportation related projects. The Board further finds that such public transportation related projects is related to new development in the City of Mt. Juliet.

(i) The findings of Impact Fee Study by James Duncan and Associates dated October 27, 1997 is adopted and incorporated by reference into this Ordinance.

Section 2. Authorization.

This Ordinance is enacted pursuant to the general police power, the authority granted pursuant to the Constitution of the State of Tennessee, the Tennessee Code Annotated and State of Tennessee Senate Bill No. 3007 enacted by Tennessee State Legislature effective May 19, 1998.

SECTION 3. Purpose and Intent.

Any judicial action or proceeding to attack, review, set aside, or annul the reasonableness, legality, or validity of any impact fee must be filed and service of process effected within ninety (90) days following the date of imposition of the fee or the final determination of the Board of Commissioners, whichever is later. In the event of a conflict between the provisions of this Ordinance and the provisions of any other ordinance or resolution establishing or amending impact fees, the provisions of this Ordinance shall govern.

SECTION 4. Effective date.

This Ordinance becomes effective upon final passage or at the earliest date allowed by law.

SECTION 5. Applicability.

Unless expressly excepted or exempted, this Ordinance applies to all fees imposed by the City to finance capital facilities, the need for which is created by new residential development, including:

SECTION 6. Exemptions.

This Ordinance does not apply to:

(a) Public Buildings "Public Buildings" shall mean a building owned by the State of Tennessee or any agency thereof, a political subdivision of the State of Tennessee, including but not necessarily limited to counties, cities, school districts and special districts, or the federal government or any agency thereof.

(b) Places of Worship "Places of Worship" shall mean that portion of a building owned by a religious institution which has tax-exempt status, which is used for worship services and related functions, but does not include buildings or portions of buildings which are used for purposes other than for worship and related functions or which are or are intended to be leased, rented or used by persons who do not have tax-exempt status.

(c) Commercial Property "Commercial Property" shall mean development of any property for a purpose other than for a dwelling unit or units.

SECTION 7. Imposition, Calculation and Collection of Impact Fees.

(a) Except as provided in this Ordinance and any amendment to this Ordinance, the City may impose impact fees as a condition of approval of all new development projects covered by this Ordinance. The fee will be imposed based on the square feet of floor area. Floor area shall mean the total of the gross horizontal area of all floors, including usable basements and cellars, below the roof and within the outer surface of the main walls of principal or accessory buildings or the center lines of party wall separating such buildings or portions thereof.

(b) The base fee amount of each residential development shall be calculated annually and adopted by the Board of Commissioners by Resolution not to exceed the maximum fees allowed by law. The fee is set at fifty (50) cents per gross square foot of new residential development and may be amended by Resolution on an annual basis as provided for in this Ordinance.

(c) Impact fees shall be collected by the Public Works Director, or at his direction, at the time and as a condition for issuance of a building permit.

(d) Impact fees shall be expended for streets and parks.

SECTION 8. Amendments

Prior to the City Commissioner's adoption of the budget and revisions to the Capital Improvements Project List, the Director of Finance shall report at least once each year to the Board of Commissioners with:

a. Recommendations for amendments to this Ordinance

b. Proposals for changes to the Capital Improvements Project List, identifying capital improvements to be funded in whole or in part by impact fees;

c. Proposals for changes in the boundaries of benefit areas; and

d. Proposals for changes to impact fee rates and schedules

SECTION 9. Appeals.

(a) Any person or concern affected by the imposition of an impact fee may challenge the imposition of a fee imposed pursuant to this Ordinance by filing with the City Clerk a written notice of appeal with a full statement of the grounds and an appeal fee of two hundred dollars ($200) or such other amount as may be fixed from time to time by Resolution of the Board of Commissioners. The City may continue processing the development application if the notice of appeal is accompanied with a bond or other security in an amount equal to the impact fee.

(b) The appellant bears the burden of demonstrating that the amount of the fee was not calculated according to the procedures established in this Ordinance or by Resolution adopting fees.

(c) At a regular meeting following the filing of the appeal, the Board of Commissioners shall fix a time and place for hearing the appeal, and the City Recorder shall mail notice of the hearing to the appellant at the address given in the notice of appeal. The hearing shall be conducted at the time and place stated in the notice, and the determination of the Board of Commissioner shall be announced at the conclusion of the hearing or at the next regular meeting of the Board of Commissioners. The determination of the Board of Commissioners shall be final.

SECTION 10. Severability

If any section, subsection, sentence, clause, phrase or portion of this Ordinance is for any reason held to be invalid or unconstitutional by the final decision of any court of competent jurisdiction, such decision shall not affect the validity of the remaining portions of this Ordinance. The City Council declares that it would have adopted this Ordinance and each section, subsection, sentence, clause, phrase, or portion thereof, despite the fact that any one or more sections, subsections, sentences, clauses, phrases, or portions would be declared invalid or unconstitutional.

BE IT FURTHER ORDAINED

In case of conflict between this ordinance or any part hereof, and the whole or part of any existing ordinance of the City, the conflicting ordinance is repealed to the extent of the conflict but no further.

If any section, clause, provision or portion of this ordinance is held to be invalid or unconstitutional by any court of competent jurisdiction, such holding shall not affect any other section, clause, provision or portion of this ordinance.

This ordinance shall take effect on the earliest date allowed by law.

PASSED:

FIRST READING: 5/18/98
SECOND READING: 6/15/98

David J. Waynick, Mayor

C. Michael Sowell, Vice-Mayor

ATTEST:

Sheila Luckett

Sheila Luckett, Recorder

James L. Bradshaw, Commissioner

Jeffrey L. Clark, Commissioner

David E. Scott, Commissioner

APPROVED AS TO FORM:

City Attorney

Danny C Farmer

Danny Farmer, City Manager

ORDINANCE 2012 – 37

AN ORDINANCE AMENDING ORDINANCE 2011 – 49, ARTICLE II, CHAPTER 8, SECTIONS 19-21 OF THE MT. JULIET MUNICIPAL CODE TO ADOPT THE 2012 EDITION OF THE INTERNATIONAL BUILDING CODE AND RELATED CODES

WHEREAS, Tenn. Code Annotated §§'s 6-54-501 through 6-54-511 authorizes municipalities to adopt building, electrical, and fire codes by reference; and,

WHEREAS, the City of Mt. Juliet Board of Commissioners are of the opinion that it is necessary for the health, safety, and welfare of the citizens of Mt. Juliet, Tennessee, to adopt the 2012 Edition of the International Building Code, regulating the conditions and maintenance of all property, buildings, and structures; by providing the standards for the supplied utilities and facilities and other physical things and conditions essential to ensure buildings that structures are safe, sanitary and fit for occupation and use; and the condemnation of buildings and structures unfit for human occupancy and use and the demolition of such structures in the City of Mt. Juliet; and providing for issuance of permits and collections of fees.

NOW THEREFORE, BE IT ORDAINED by the City Commission of City of Mt. Juliet, Wilson County, Tennessee, as follows:

Section 1. Article II, Chapter 8, Sections 19-21 of the Mt. Juliet Municipal Code is amended by deleting the current Article II, Chapter 8, Sections 19-21 in their entirety and substituting in lieu thereof the following sections:

CHAPTER 1 INTERNATIONAL BUILDING CODE ADOPTED

8-19. Adoption of International Building Code. The International Building Code, 2012 Edition and other adopted codes, one (1) copy is on file in the Office of the Building Official in the Public Works Department of the City of Mt. Juliet, as published by the International Code Council, be and is hereby adopted as the official building code of the City of Mt. Juliet for regulating and governing the conditions and maintenance of all property buildings and structures; by providing the standard for supplied utilities and facilities and other physical things and conditions essential to ensure that structures are safe, sanitary and fit for occupation and use; and the condemnation of buildings and structures unfit for human occupancy and use and the demolitions of such structures in the City of Mt. Juliet; and providing for the issuance of permits and collection of fees; and each and all of the regulations, provisions, penalties, conditions and terms of the International Building Code are hereby adopted and made a part hereof, as if fully set out in this Ordinance, with the additions prescribed in Section 8-20.

8-20. Additional Codes Adopted. The following additional cods are hereby adopted:

2012 Edition of International Residential Code; plus Appendices A, B, C, E, F, G, H, I, J, K, M, N, O, P and Q; and amended as follows;

1. Section R101.1, Insert "City of Mt. Juliet Tennessee" in "Name of Jurisdiction",

2. Table R301.2(1) adding the following Snow Load "10#", wind speed "90", Seismic "B", weathering "severe", Frost Line Depth, 6", Termite "Moderate to Heavy", Winter design temperature "14°F", Ice Barrier Required, "No", Flood Hazards, "As shown on FEMA FIRM Panel , Dated , Air Freezing Index "1500 or less", and Mean Annual Temperature "57°F".

3. Section 303.4 Add the following language to the end of the code section to read, "…or approved air exchanger on the HVAC System which will make up the required ventilation."

4. Section R313.2 Remove and replace the words, "one-and two-family dwellings" with "all residential dwellings except, Single-Family Dwellings"

5. Section P2503.5.1 Remove the words, "Other than plastic"

2012 Edition of International Building Code; plus appendices A, B, C, E, F, G H, I, J, and K; and amended as follows:

1. Section 1013.8, change "36" inches to "24" inches

2012 Edition of International Mechanical Code plus Appendix A

2012 Edition of International Plumbing Code plus Appendices B, C, D, E, and F

2012 Edition of International Existing Building Code plus Appendix A, B and Resource A

2012 Edition of International Fuel Gas Code plus Appendices A, B, C, and D

2012 Edition of International Property Maintenance Code

2012 Edition of International Fire Code plus Appendices A, B, C, D, E, F, G, H, I, and J

2012 Edition of International Energy Conservation Code as amended as follows:

1. Replace Table C402.2 with Table 502.2(1) & (2) from the 2006 Edition of the IECC

2. Replace Table R402.1.1 with Table 402.1.1 from the 2006 Edition of the IECC

2012 Edition to Life Safety Code plus Annexes A, B, and C

2009 ICC/ANSI A117.1 and the 2010 Edition of the Americans with Disabilities Act for Accessibility Code

2012 International Swimming Pool and Spa Code

2008 ICC-500 Construction of Storm Shelters

2007 ICC-400 Construction of Log Homes

2012 ICC-300 Construction of Bleachers, Folding and Telescopic Seating, and Grandstands

2011 Edition of the National Electrical Code, (NFPA 70) is adopted by reference.

Article 90 through Chapter 9 inclusive are adopted and incorporated into this chapter as the technical section of the electrical code of the City of Mt Juliet, by reference, as fully as though copied into this chapter.

The City of Mt Juliet's adoption of the 2011 NEC is hereby amended by the following:

Amendments to the National Electrical Code.

A. Section 100.1 of the 2011 Edition of the National Electrical Code is amended by deleting the definition of Authority Having Jurisdiction and substituting the following:

Authority Having Jurisdiction - The Chief Building Official of the City of Mt Juliet.

B. Section 210.12(A) of the 2011 Edition of the National Electrical Code is amended by deleting Section 210.12(A) and substituting the following:

1. 210.12 Arc-Fault Circuit-Interrupter Protection.

(A) Dwelling Units. All 120-volt, single phase, 15- and 20-ampere branch circuits supplying outlets installed in dwelling unit bedrooms shall be protected by a listed arc-fault circuit interrupter, combination-type, installed to provide protection of the branch circuit.

Informational Note No. 1: For information on types of arc-fault circuit interrupters, see UL 1699-1999, *Standard for Arc-Fault Circuit Interrupters*.

Informational Note No. 2: See 11.6.3(5) of *NFPA 72*-2010, *National Fire Alarm and Signaling Code*, for information related to secondary power supply requirements for smoke alarms installed in dwelling units.

Informational Note No. 3: See 760.41(B) and 760.121(B) for power-supply requirements for fire alarm systems.

Exception No. 1: If RMC, IMC, EMT, Type MC, or steel armored Type AC cables meeting the requirements of 250.118 and metal outlet and junction boxes are installed for the portion of the branch circuit between the branch circuit overcurrent device and the first outlet, it shall be permitted to install an outlet branch-circuit type AFCI at the first outlet to provide protection for the remaining portion of the branch circuit.

Exception No. 2: Where a listed metal or nonmetallic conduit or tubing is encased in not less than 50 mm (2 in.) of concrete for the portion of the branch circuit between the branch-circuit overcurrent device and the first outlet, it shall be permitted to install an outlet branch-circuit type AFCI at the first outlet to provide protection for the remaining portion of the branch circuit.

Exception No. 3: Where an individual branch circuit to a fire alarm system installed in accordance with 760.41(B) or 760.121(B) is installed in RMC, IMC, EMT, or steel sheathed cable, Type AC or Type MC, meeting the requirements of 250.118, with metal outlet and junction boxes, AFCI protection shall be permitted to be omitted.

8-21. Penalty. It shall be illegal for any person to violate any provision of a code adopted by the City of Mt. Juliet. Violations shall be punished by a fine not to exceed Fifty Dollars ($50.00). Each day that a violation continues after due notice has been served shall be deemed a separate offense.

BE IT FURTHER ORDAINED

In case of conflict between this ordinance or any part hereof, and the whole or part of any existing ordinance of the City, the most restrictive code provision will apply, If any section, clause, provision or portion of this ordinance is held to be invalid or unconstitutional by any court of competent jurisdiction, such holding shall not affect any other section, clause, provision or portion of this ordinance.

That nothing in this ordinance or in the International Building Codes hereby adopted shall be construed to affect any suit or proceedings pending in any, court, or any rights acquired, or liability incurred, or any cause or causes of action acquired or existing, under any act or ordinance hereby repealed, not shall nay just or legal right, remedy of any character be lost, impaired or affected by this ordinance.

This ordinance shall take effect on the earliest date allowed by law.

PASSED:

Ed Hagerty

Ed Hagerty, Mayor

FIRST READING: 5/14/12
SECOND READING: 6/11/12

ATTEST:

Sheila S. Luckett

Sheila S. Luckett, CMC
City Recorder

APPROVED AS TO FORM:

Jason Holleman

Kenny Martin

Kenny Martin, Interim City Manager

8-20. Additional Codes Adopted. The following additional cods are hereby adopted:

2012 Edition of International Residential Code; plus Appendices A, B, C, E, F, G, H, I, J, K, M, N, O, P and Q; and amended as follows;

1. Section R101.1, Insert "City of Mt. Juliet Tennessee" in "Name of Jurisdiction",

R101.1 Title.
These provisions shall be known as the Residential Code for One- and Two-family Dwellings of ~~[NAME OF JURISDICTION]~~ *City of Mt. Juliet Tennessee*, and shall be cited as such and will be referred to herein as "this code."

Table R301.2(1) adding the following Snow Load "10#", wind speed "90", Seismic "B", weathering "severe", Frost Line Depth, 6", Termite "Moderate to Heavy", Winter design temperature "14°F", Ice Barrier Required, "No", Flood Hazards, "As shown on FEMA FIRM Panel , Dated , Air Freezing Index "1500 or less", and Mean Annual Temperature "57°F".

TABLE R301.2(1)
CLIMATIC AND GEOGRAPHIC DESIGN CRITERIA

GROUND SNOW LOAD	WIND DESIGN		SEISMIC DESIGN CATEGORY[f]	SUBJECT TO DAMAGE FROM			WINTER DESIGN TEMP[e]	ICE BARRIER UNDERLAYMENT REQUIRED[h]	FLOOD HAZARDS[g]	AIR FREEZING INDEX[i]	MEAN ANNUAL TEMP[j]
	Speed[d] (mph)	Topographic effects[k]		Weathering[a]	Frost line depth[b]	Termite[c]					
10	*90*	*NA*	*B*	*SEVERE*	*6"*	*Mod to Hvy*	*14°F*	*NO*	*SEE FIRM*	*1,500 or Less*	*57°F*

3. Section 303.4 Add the following language to the end of the code section to read, "…or approved air exchanger on the HVAC System which will make up the required ventilation."

R303.4 Mechanical ventilation.
Where the air infiltration rate of a dwelling unit is less than 5 air changes per hour when tested with a blower door at a pressure of 0.2 inch w.c (50 Pa) in accordance with Section N1102.4.1.2, the dwelling unit shall be provided with whole-house mechanical ventilation in accordance with Section M1507.3 *or approved air exchanger on the HVAC System which will make up the required ventilation.*

4. Section R313.2 Remove and replace the words, "one-and two-family dwellings" with "all residential dwellings except, Single-Family Dwellings"

R313.2 One- and two-family dwellings automatic fire systems.

An automatic residential fire sprinkler system shall be installed in ~~one- and two-family dwellings.~~ *all residential dwellings except one- and two-family dwellings.*

5. Section P2503.5.1 Remove the words, "Other than plastic"

P2503.5.1 Rough plumbing.

DWV systems shall be tested on completion of the rough piping installation by water or for piping systems ~~other than plastic~~, by air with no evidence of leakage. Either test shall be applied to the drainage system in its entirety or in sections after rough piping has been installed, as follows:

1. **Water test. Each section shall be filled with water to a point not less than 10 feet above the highest fitting connection in that section, or to the highest point in the completed system. Water shall be held in the section under test for a period of 15 minutes. The system shall prove leak free by visual inspection.**

2. **Air test. The portion under test shall be maintained at a gauge pressure of 5 pounds per square inch (psi) or 10 inches of mercury column. This pressure shall be held without introduction of additional air for a period of 15 minutes.**

2012 Edition of International Building Code; plus appendices A, B, C, E, F, G H, I, J, and K; and amended as follows:

1. Section 1013.8, change "36" inches to "24" inches

1013.8 Window sills.

In Occupancy Groups R-2 and R-3, one- and two-family and multiple-family dwellings, where the opening of the sill portion of an operable window is located more than 72 inches above the finished grade or other surface below, the lowest part of the clear opening of the window shall be at a height not less than ~~36~~ *24* inches above the finished floor surface of the room in which the window is located. Operable sections of windows shall not permit openings that allow passage of a 4-inch-diameter sphere where such openings are located within ~~36~~ *24* inches of the finished floor.

2012 Edition of International Energy Conservation Code as amended as follows:

1. Replace Table C402.2 with Table 502.2(1) & (2) from the 2006 Edition of the IECC

TABLE C402.2
OPAQUE THERMAL ENVELOPE REQUIREMENTS[a]

CLIMATE ZONE	1		2		3		4 EXCEPT MARINE		5 AND MARINE 4		6		7		8	
	All Other	Group R	All Other	Group R	All Other	Group R	All Other	Group R	All Other	Group R	All Other	Group R	All Other	Group R	All Other	Group R
Roofs																
Insulation entirely above deck	R-20cl	R-20cl	R-20cl	R-20cl	R-20cl	R-20cl	R-25cl	R-25cl	R-25cl	R-25cl	R-30cl	R-30cl	R-35cl	R-35cl	R-35cl	R-35cl
Metal buildings (with R-5 thermal blocks)[a, b]	R-19 + R-11 LS	R-19 + R-11 LS	R-19 + R11 LS	R-19 + R-11 LS	R-19 + R-11 LS	R-19 + R-11 LS	R-19 + R-11 LS	R-19 + R-11 LS	R-19 + R-11 LS	R-19 + R-11 LS	R-25 + R-11 LS	R-25 + R-11 LS	R-30 + R-11 LS	R-30 + R-11 LS	R-30 + R-11 LS	R-30 + R-11 LS
Attic and other	R-38	R-38	R-38	R-38	R-38	R-38	R-38	R-38	R-38	R-49	R-49	R-49	R-49	R-49	R-49	R-49
Walls, Above Grade																
Mass	R-5.7cl	R-5.7cl	R-5.7cl	R-7.6cl	R-7.6cl	R-9.5cl	R-9.5cl	R-11.4cl	R-11.4cl	R-13.3cl	R-13.3cl	R-15.2cl	R-15.2cl	R-15.2cl	R-25cl	R-25cl
Metal building	R-13+ R-6.5cl	R-13 + R-6.5cl	R13 + R-6.5cl	R-13 + R-13cl	R-13 + R-6.5cl	R-13 + R-13cl	R-13 + R-13cl	R-13 + R-13cl	R-13 + R-13cl	R-13 + R-13cl	R-13+ R-13cl	R-13 + R-13cl	R-13 + R-13cl	R-13+ R-19.5cl	R-13 + R-13cl	R-13+ R-19.5cl
Metal framed	R-13 + R-5cl	R-13 + R-5cl	R-13 + R-5cl	R-13 + R-7.5cl	R-13 + R-7.5cl	R-13 + R-7.5cl	R-13 + R-7.5cl	R-13 + R-7.5cl	R-13 + R-7.5cl	R-13 + R-7.5cl	R-13 + R-7.5cl	R-13 + R-7.5cl	R-13 + R-7.5cl	R-13 + R-15.6cl	R-13 + R-7.5cl	R-13+ R17.5cl
Wood framed and other	R-13 + R-3.8cl or R-20	R-13 + R-3.8cl or R-20	R-13 + R-3.8cl or R-20	R-13 + R-3.8cl or R-20	R-13 + R-3.8cl or R-20	R-13 + R-3.8cl or R-20	R-13 + R-3.8cl or R-20	R-13 + R-3.8cl or R-20	R-13 + R-3.8cl or R-20	R-13 + R-7.5cl or R-20 + R-3.8cl	R-13 + R-7.5cl or R-20 + R-3.8cl	R-13 + R-7.5cl or R-20 + R-3.8cl	R-13 + R-7.5cl or R-20 + R-3.8cl	R-13 + R-7.5cl or R-20 + R-3.8cl	R-13 + R-15.6cl or R-20 + R-10cl	R-13 + R-15.6cl or R-20 + R-10cl
Walls, Below Grade																
Below-grade wall[d]	NR	NR	NR	NR	NR	NR	R-7.5cl	R-7.5cl	R-7.5cl	R-7.5cl	R-7.5cl	R-7.5cl	R-10cl	R-10cl	R-10cl	R-12.5cl
Floors																
Mass	NR	NR	R-6.3cl	R-8.3cl	R-10cl	R-10cl	R-10cl	R-10.4cl	R-10cl	R-12.5cl	R-12.5cl	R-12.5cl	R-15cl	R-16.7cl	R-15cl	R-16.7cl
Joist/framing	NR	NR	R-30	R-30	R-30	R-30	R-30	R-30	R-30	R-30	R-30	R-30[e]	R-30[e]	R-30[e]	R-30[e]	R-30[e]
Slab-on-Grade Floors																
Unheated slabs	NR	NR	NR	NR	NR	NR	R-10 for 24" below	R-10 for 24" below	R-10 for 24" below	R-10 for 24" below	R-10 for 24" below	R-15 for 24" below	R-15 for 24" below	R-15 for 24" below	R-15 for 24" below	R-20 for 24" below
Heated slabs[d]	R-7.5 for 12" below	R-7.5 for 12" below	R-7.5 for 12" below	R-7.5 for 12" below	R-10 for 24" below	R-10 for 24" below	R-15 for 24" below	R-15 for 24" below	R-15 for 36" below	R-15 for 36" below	R-15 for 36" below	R-20 for 48" below	R-20 for 24" below	R-20 for 48" below	R-20 for 48" below	R-20 for 48" below
Opaque Doors																
Swinging	U-0.61	U-0.61	U-0.61	U-0.61	U-0.61	U-0.61	U-0.61	U-0.61	U-0.37	U-0.37	U-0.37	U-0.37	U-0.37	U-0.37	U-0.37	U-0.37
Roll-up or sliding	R-4.75	R-4.75	R-4.75	R-4.75	R-4.75	R-4.75	R-4.75	R-4.75	R-4.75	R-4.75	R-4.75	R-4.75	R-4.75	R-4.75	R-4.75	R-4.75

TABLE 502.2(1)
BUILDING ENVELOPE REQUIREMENTS – OPAQUE ASSEMBLIES

CLIMATE ZONE	1	2	3	4 except Marine	5 and Marine 4	6	7	8
Roofs								
Insulation entirely above deck	R-15 ci	R-15 ci	R-15 ci	R-15 ci	R-20 ci	R-20 ci	R-25 ci	R-25 ci
Metal buildings (with R-5 thermal blocks[e])[a]	R-19 + R-10	R-19	R-19	R-19	R-19	R-19	R-19 + R-10	R-19 + R-10
Attic and other	R-30	R-30	R-30	R-30	R-30	R-30	R-38	R-38
Walls, Above Grade								
Mass	NR	NR	R-5.7 ci[c, e]	R-5.7 ci[c]	R-7.6 ci	R-9.5 ci	R-11.4 ci	R-13.3 ci
Metal building[a]	R-13	R-13	R-13	R-13	R-13 + R-13	R-13 + R-13	R-13 + R-13	R-13 + R-13
Metal framed	R-13	R-13	R-13	R-13	R-13 + R-3.8 ci	R-13 + R-3.8 ci	R-13 + R-7.5 ci	R-13 + R-7.5 ci
Wood framed and other	R-13	R-13	R-13	R-13	R-13	R-13	R-13	R-13 + R-7.5 ci
Walls, Below Grade								
Below grade wall[c]	NR	NR	NR	NR	NR	NR	R-7.5 ci	R-7.5 ci
Floors								
Mass	NR	R-5 ci	R-5 ci	R-10 ci	R-10 ci	R-10 ci	R-15 ci	R-15 ci
Joist/Framing	NR	R-19	R-19	R-19	R-19	R-30	R-30	R-30
Slab-on-Grade Floors								
Unheated slabs	NR	NR	NR	NR	NR	NR	NR	R-10 for 24 in. below
Heated slabs	R-7.5 for 12 in. below	R-7.5 for 12 in. below	R-7.5 for 12 in. below	R-7.5 for 12 in. below	R-7.5 for 24 in. below	R-10 for 36 in. below	R-10 for 36 in. below	R-10 for 48 in. below
Opaque Doors								
Swinging	U – 0.70	U – 0.70	U – 0.70	U – 0.70	U – 0.70	U – 0.70	U – 0.70	U – 0.50
Roll-up or sliding	U – 1.45	U – 1.45	U – 1.45	U – 1.45	U – 1.45	U – 0.50	U – 0.50	U – 0.50

2. Replace Table R402.1.1 with Table 402.1.1 from the 2006 Edition of the IECC

TABLE R402.1.1
INSULATION AND FENESTRATION REQUIREMENTS BY COMPONENT[a]

CLIMATE ZONE	FENESTRATION U-FACTOR[b]	SKYLIGHT[b] U-FACTOR	GLAZED FENESTRATION SHGC[b, e]	CEILING R-VALUE	WOOD FRAME WALL R-VALUE	MASS WALL R-VALUE[i]	FLOOR R-VALUE	BASEMENT[c] WALL R-VALUE	SLAB[d] R-VALUE & DEPTH	CRAWL SPACE[c] WALL R-VALUE
1	NR	0.75	0.25	30	13	3/4	13	0	0	0
2	0.40	0.65	0.25	38	13	4/6	13	0	0	0
3	0.35	0.55	0.25	38	20 or 13+5[h]	8/13	19	5/13[f]	0	5/13
4 except Marine	0.35	0.55	0.40	49	20 or 13+5[h]	8/13	19	10/13	10, 2 ft	10/13
5 and Marine 4	0.32	0.55	NR	49	20 or 13+5[h]	13/17	30[g]	15/19	10, 2 ft	15/19
6	0.32	0.55	NR	49	20+5 or 13+10[h]	15/20	30[g]	15/19	10, 4 ft	15/19
7 and 8	0.32	0.55	NR	49	20+5 or 13+10[h]	19/21	38[g]	15/19	10, 4 ft	15/19

TABLE 402.1.1
INSULATION AND FENESTRATION REQUIREMENTS BY COMPONENT[a]

CLIMATE ZONE	FENESTRATION *U*-FACTOR	SKYLIGHT[b] U-FACTOR	GLAZED FENESTRATION SHGC	CEILING *R*-VALUE	WOOD FRAME WALL *R*-VALUE	MASS WALL *R*-VALUE	FLOOR *R*-VALUE	BASEMENT[c] WALL *R*-VALUE	SLAB[d] *R*-VALUE & DEPTH	CRAWL SPACE[c] WALL *R*-VALUE
1	1.20	0.75	0.40	30	13	3	13	0	0	0
2	0.75	0.75	0.40	30	13	4	13	0	0	0
3	0.65	0.65	0.40[e]	30	13	5	19	0	0	5 / 13
4 except Marine	0.40	0.60	NR	38	13	5	19	10 / 13	10, 2 ft	10 / 13
5 and Marine 4	0.35	0.60	NR	38	19 or 13+5[g]	13	30[f]	10 / 13	10, 2 ft	10 / 13
6	0.35	0.60	NR	49	19 or 13+5[g]	15	30[f]	10 / 13	10, 4 ft	10 / 13
7 and 8	0.35	0.60	NR	49	21	19	30[f]	10 / 13	10, 4 ft	10 / 13

SUBJECT: An Ordinance to Adopt the 2012 Edition of the Suite of International and other codes.

WHO: Board of Commissioners

WHAT: The City of Mt. Juliet, acting through the Building and Codes Division of Public Works adopts rules and regulations for the following building related activities: new building construction, building revisions and/or modifications, plumbing, mechanical, demolition, swimming pool, fire code system, structure moving, construction inspection, and plans review to support said building construction, modification and/or revision activities. This Ordinance provides for the following:

a). replaces the current adopted codes to the 2012 Suite of codes as published by the International Code Council;

b).brings our adopted codes to a standard that will not affect our ISO Building Division Rating;

c). codification of other related ordinances into a single document.

WHEN: May 9, 2012

WHERE: N/A

WHY: Current Building Codes as adopted by the City of Mt. Juliet are now out of date and should be brought current. The ISO (Insurance Services Office) has informed us by not adopting these codes we will have our ISO Rating dropped by at least 2 points.

STAFF RECOMMENDATION: Staff Recommends that the Board of Commissioners approve the Ordinance.

Prepared By: Dwayne Hicks, Chief Building and Fire Code Official

ORDINANCE 2017 – 38

AN ORDINANCE AMENDING ORDINANCE 2012 – 37, ARTICLE II, CHAPTER 8, SECTIONS 9-20 (2) "ADDITIONAL CODES ADOPTED" OF THE MT. JULIET MUNICIPAL CODE TO ADOPT THE 2014 EDITION OF THE NATIONAL CODE AND TO ADD LOCAL REGULATIONS

WHEREAS, Tenn. Code Annotated §§'s 6-54-501 through 6-54-511 authorizes municipalities to adopt building, electrical, and fire codes by reference; and,

WHEREAS, the City of Mt. Juliet Board of Commissioners are of the opinion that it is necessary for the health, safety, and welfare of the citizens of Mt. Juliet, Tennessee, to adopt the 2014 Edition of the National Electrical Code and to add local regulations regulating the conditions and maintenance of all property, buildings, and structures; by providing the standards for the supplied utilities and facilities and other physical things and conditions essential to ensure buildings that structures are safe.

NOW THEREFORE, BE IT ORDAINED by the City Commission of City of Mt. Juliet, Wilson County, Tennessee, as follows:

Section 1. Article II, Chapter 8, Sections 8-20 (2) "Additional Codes Adopted" of the Mt. Juliet Municipal Code is amended by adopting the 2014 National Electrical Code and to add the following regulations to be enforced:

Local Amendments are as follows:

1) Type NM cable (Romex) shall be permitted in new or remodeled commercial buildings under 3000 sq. ft. in walls and ceilings covered with 5/8" type X gypsum board or equivalent material as to provide a 30-minute fire rating.
2) Type NM cable (Romex) is not permitted in walls constructed with metal stud framing.
3) Smoke Detector & Carbon Monoxide Detector boxes shall be marked Red.
4) Ufer (Footer) Grounds shall be inspected prior to Footing Inspection.
5) Article 110.24 Available Fault Current (A) Field Markings & (B) Modifications, shall be optional.
6) Sheet Rock Screws shall not be permitted to secure any electrical equipment.
7) All boxes shall be secured and all splices made with approved and listed terminals at time of rough-in inspection.
8) Temporary Electrical Services shall be properly braced and maintained in a safe and secure manner at all times. Failure to maintain the temporary service will result in the service being disconnected and a re-inspection required.

Section 2: The 2014 National Electrical Code and the local amendments shall become effective July 1, 2017.

BE IT FURTHER ORDAINED

In case of conflict between this ordinance or any part hereof, and the whole or part of any existing ordinance of the City, the most restrictive code provision will apply, If any section, clause, provision or portion of this ordinance is held to be invalid or unconstitutional by any court of competent jurisdiction, such holding shall not affect any other section, clause, provision or portion of this ordinance.

This ordinance shall take effect on the July 1, 2017.

PASSED: 6/12/2017

Ed Hagerty, Mayor

FIRST READING: 5/8/2017
SECOND READING: 6/12/2017

ATTEST:

Sheila S. Luckett, MMC
City Recorder

APPROVED AS TO FORM:

L. Gino Marchetti, Jr.
City Attorney

Kenneth D. Martin, City Manager

Adoption of The 2014 National Electrical Code

2014 National Electrical Code is to be enforced as written beginning July 1st 2017.

Local Amendments are as follows:

1) Type NM cable (Romex) shall be permitted in new or remodeled commercial buildings under 3000 sq. ft. in walls and ceilings covered with 5/8" type X gypsum board or equivalent material as to provide a 30-minute fire rating.
2) Type NM cable (Romex) is not permitted in walls constructed with metal stud framing.
3) Smoke Detector & Carbon Monoxide Detector boxes shall be marked Red.
4) Ufer (Footer) Grounds shall be inspected prior to Footing Inspection.
5) Article 110.24 Available Fault Current (A) Field Markings & (B) Modifications, shall be optional.
6) Sheet Rock Screws shall not be permitted to secure and electrical equipment.
7) All boxes shall be secured and all splices made with approved and listed terminals at time of rough-in inspection.
8) Temporary Electrical Services shall be properly braced and maintained in a safe and secure manner at all times. Failure to maintain the temporary service will result in the service being disconnected and a re-inspection required.

City of Mt. Juliet

Building Department

Checklist for Critical Lot

(Site Plan Submittal)

Property Address: _____

Lot and Subdivision: _____

Submitted By: _____

Date: _____

_____ Existing site contours relative to MSL datum.

_____ Proposed site contours.

_____ Proposed buildings on the site with building dimensions and setback distances from side and front property lines.

_____ Finished floor elevation of all proposed structures.

_____ Proposed driveway access with dimensions and distance from property line

_____ Engineered design of building foundation.

_____ Soils analysis showing soil characteristics. (Bearing capacity, soil type, slope stability)

_____ Erosion control plan with applicable erosion control details and notes.

_____ Plan for re-vegetation of disturbed areas on the site.

_____ Floodplain / Floodway location.

2425 N. MT. JULIET RD. • MT. JULIET, TN 37122 • (615) 773-6225 • FAX (615) 773-4511

road trails, which in turn should link with potential open space on adjoining undeveloped parcels (or with existing open space on adjoining developed parcels, where applicable).

13. *Provides open space that is reasonably contiguous*, and whose configuration is in accordance with the guidelines contained in the *Design and Management Handbook for Preservation Areas*, produced by the Natural Lands Trust. To the greatest extent practicable this land shall be designed as a single block with logical, straightforward boundaries. Long thin strips of conservation land shall be avoided, unless the conservation feature is linear or unless such configuration is necessary to connect with other streams or trails. The open space shall generally abut existing or potential open space land on adjacent parcels (such as in other subdivisions, public parks, or properties owned by or leased to private land conservation organizations). Such subdivision open space shall be designed as part of large contiguous and integrated greenway systems, as per the policies in the Open Space, Recreation, and Environmental Resources Element of the city's comprehensive plan.

4-102.103 Lots Subject to Flood

No portion of a "building site" (see definition) associated with any residential structure may be located in any flood prone area. However, portions of lots occupied by residential structures that are located beyond a "building site" may contain land subject to flooding. In any instance where the lot is served by subsurface sewage disposal the area of the disposal fields shall not lie within any flood prone area. Adding fill material within the one hundred-year flood boundary area will not be permitted unless approved by the planning commission. In the event that filling within the flood boundary is approved, the fill shall be protected against erosion by rip-rap, vegetative cover, or other methods deemed acceptable by the Planning Commission.

On nonresidential building sites outside a one hundred-year flood boundary the use of structural floodproofing methods specified in Subsection 4-101.403, (Protection Against Flood Damage), of these regulations, as an alternative to fill material, may be approved by the Planning Commission, as provided in Subsection 2-101.4, of these regulations.

4-102.104 Lots with Building Sites Located on Steep Slopes

Due to the potential threat to health and safety posed by development located on lands with slopes in excess of fifteen (15) percent, the following regulations shall apply:

a. Site Development Plan Required -- No building permit may be issued for a building or any lot where the proposed building site lies on natural slopes of twenty (20) percent or greater. For any lot where the proposed building site has slopes of less than twenty

(20) percent but fifteen (15) percent or greater a site plan meeting the following requirements must be approved by the planning commission or designee prior to issuance of a building permit. Said site plan shall show:

(i) The exact size, shape, and location of the lot,

(ii) The proposed location of all buildings, sidewalks, driveways, drainageways, and utilities, and showing the proposed slopes and transitions between walks and driveways.

(iii) Proposed contours at vertical intervals of no more than five (5) feet,

(iv) The extent of natural tree cover and vegetation,

(v) The location of any on-site soil absorption sewage disposal systems,

(vi) The type and location of erosion control facilities.

(vii) The stamp of the Tennessee registered engineer who prepared the plan,

(viii) Certification by a Tennessee registered civil or geotechnical engineer as to the stability of the structures and compliance with sound construction methods for areas with steep slopes and landslide problems.

b. Site Development Standards -- The following standards shall be used as a guide in determining the suitability of the construction proposed for the particular site in question. The engineer's certification required in Subsection 4-102.103, a, (viii), above, shall address these standards.

(i) Natural vegetation shall be preserved to the maximum extent possible,

(ii) Natural drainageways and systems shall be maintained, except that surface water may be diverted around a house or slope area to a natural drain using acceptable construction techniques,

(iii) Operations that increase loads, reduce slope support, and cause instability of the slope shall be prohibited to the maximum extent possible. These methods include filling, irrigation systems, accessory buildings, and on-site soil absorption sewage disposal systems,

(iv) Where sanitary sewers are not available all on-site sewage disposal systems shall be shown on the site plan and located to avoid slide-prone areas. Said system shall be approved by the county health department taking into account these requirements,

(vi) Erosion control measures shall be employed to prevent soil from leaving the site. Additionally, soil from excavation on the site shall not be deposited as fill on a potential slide area,

(vii) No construction that would cut the toe of the slope shall be permitted. This shall apply as well to subdivision roads constructed in compliance with these regulations.

4-102.2 Lot Dimensions

Except as provided in Subsection 4-102.3 (Special Building Separation) minimum dimensions of lots shall comply with the standards of the zoning ordinance. All building setbacks shall be indicated for each lot shown on the plat.

Where lots are more than double the minimum area required by the zoning ordinance, the Planning Commission may require that such lots be restricted to prevent further resubdivision or be arranged so as to allow further subdivision and the opening of future public ways where they would be necessary to serve such potential lots, all in compliance with the zoning ordinance and these regulations.

Dimensions of corner lots shall be large enough to allow for erection of buildings, observing the minimum front yard setback requirements from both public way rights-of-way.

The minimum lot frontage on a public way shall be fifty (50) feet, except for the radius of a cul-de-sac that shall be thirty-five (35) feet.

Depth and width of properties reserved or laid out for business, commercial, or industrial purposes shall be adequate to provide for the off-street parking and loading facilities required for the type of use and development contemplated as established in the zoning ordinance.

4-102.3 Special Building Separation

In all instances where fire flows are inadequate to meet the requirements of these regulations or no fire hydrant is located within sufficient distance to meet the fire protection standards established herein, the minimum separation of principal buildings shall at all points be fifty (50) feet.

4-102.4 Building Setbacks from High Voltage Electric Lines

In the case of electric transmission lines where easement widths are not definitely established, a minimum building setback line from the center of the transmission line shall be established as follows:

City of Mt. Juliet

Building Department

Fats, Oil & Grease Pretreatment Requirements

Scope & Purpose:

To prevent sanitary and combined sewer system blockages, obstructions and overflows due to the contribution and accumulation of fats, oils and grease from food service establishments, commercial facilities and industrial facilities.

All new food service establishments or existing food service establishments that are being upgraded or remodeled must meet the requirements of the City of Mt. Juliet FOG Program Operation Division Policy No. 2008-08.

NEW MULTI-UNIT FACILITIES: New strip malls or strip centers must have two (2) separate sewer line connections at each unit within the strip mall or strip center. One sewer line will be for sanitary wastewater and one for the grease line will be for the kitchen area, or potential kitchen area, of each unit. The kitchen area, or potential kitchen area, grease line will be connected to the floor drains in the specified kitchen area, and will connect, or be able to connect, to other food service establishment kitchen fixtures, such as three (3) compartment sink, two (2) compartment sink, pre-rinse sink, mop sink, and hand wash sink.

New multi-unit facility, or new "strip mall" facility, owners shall contact the Public Works Department prior to conducting private plumbing work at the multi-unit facility site.

***Engineer Plans Required**

A set of engineered plumbing drawings is required before any approval or decision will be made. E-mailed plans are approved.

You may contact the Pretreatment Division and email plans to:

Attn: George Page
71 E. Hill Street
Mt. Juliet, TN 37122
(615) 773-7957 Ext. 274
gpage@cityofmtjuliet.org

City of Mt. Juliet Building Department

Notices

Revised 01/16/2018

City of Mt. Juliet Building Department

BUILDING INSPECTION REQUEST

DATE OF REQUEST_____ DATE REQUESTED FOR_____

ADDRESS_____

LOT # _____ SUBDIVISION _____

REQUESTED BY: _____ PHONE # _____

NOTES:

PERMIT TYPE	PERMIT NUMBER
☐ BUILDING	
☐ PLUMBING	
☐ MECHANICAL/GAS	
☐ ELECTRICAL	
☐ ELECTRICAL - LV	
☐ ELECTRICAL - HVAC	
☐ SPRINKLER (if applicable)	

INSPECTION TYPE REQUESTED		
☐ Electrical Temp Pole	☐ Plumbing Rough-In	☐ Electrical Ground Rod
☐ Footing ☐ AM ☐ PM	☐ Mechanical Rough-In	☐ Electrical Service Release
☐ Slab (Radon)	☐ Gas Rough-In	☐ Electrical Final
☐ Plumbing Slab	☐ Frame	☐ Electrical HVAC Final
☐ Electrical Slab	☐ Fire Sprinkler	☐ Electrical Low Voltage Final
☐ Electrical HVAC Rough-In		
☐ Electrical Rough-In		
☐ Electrical Low Voltage Rough-In	☐ Insulation	☐ Building Final
	☐ Sewer Connections	☐ Mechanical Final
	☐ Water Connections	☐ Plumbing Final

2425 North Mt. Juliet Road ▪ Mt. Juliet, TN. 37122 ▪ Phone (615) 773-6225 ▪ Fax (615) 773-4511

Notice

To: All Builders – Developers, and Contractors

From: City of Mt. Juliet, Building Department

RE: Lots not clearly marked

Effective Immediately!

NO INSPECTIONS will be done if the lot is not **clearly** marked.

We are unable to spend time looking for you lot. This will be considered a FAILED INSPECTION and you will be charged for it.

If you have any question please call the Building Department at 773-6225.

Notice

To: All Builders, Developers, and Contractors

From: City of Mt. Juliet, Building Department

RE: Permits – Access – Inspection

PERMITS:
Permits must be on all job sites at all times for inspectors to verify job address and sign off on all inspections performed. Permits are to be kept on site in a mail box (6' to the top of the box), but they must remain on site at all times until completion of job.

ACCESS:
Builders must provide access to all areas needing to be inspected. Crawl spaces must be accessible for floor system inspection. Attic spaces must be accessible for inspection. If it can't be seen form the floor, you must provide a way for the inspector to see all areas needing to be inspected.

INSPECTIONS:
Footing and foundation inspection will be done first. We will try to do them within a 24 hour period. All other inspections are required to give at least a one day lead time. It may take longer than 1 day to accomplish the inspection but they will be done on a first come first serve basis.

If you have any question please call the Building Department at 773-6225.

Notice

To: All Builders, Developers, and Contractors

From: City of Mt. Juliet, Building Department

RE: Pressure Tests

PRESSURE TESTS: in order to achieve consistency for inspections, the following gauge reading will be required at the time of inspection:

Water – 80 p.s.i. minimum
Gas – 15 p.s.i. minimum

If you have any question please call the Building Department at 773-6225.

Notice

To: All Builders, Developers, and Contractors

From: City of Mt. Juliet, Building Department

RE: Copper Gas Lines

The City of Mt. Juliet Building Inspectors office will accept **Copper Gas Lines**. But they must be at least type **L copper**.

Further more, we require the line to be clearly marked as gas lines by painting them with **yellow** paint that will adhere to the copper. We also require the installers to use all safety precautions as necessary for proper installation.

If you have any question please call the Building Department at 773-6225.

Notice

To: All Builders, Developers, and Contractors

From: City of Mt. Juliet, Building Department

RE: Requiring Foundation Survey

Beginning June 1, 2009

The City of Mt. Juliet Building Department now requires a Foundation Survey; please be sure to have this completed before framing. The foundation survey can either be delivered to the office at 2425 N. Mt. Juliet Road or faxed in at (615) 754-5742. If the foundation survey has not been turned into the office by frame inspection time, we will **NOT** perform a frame inspection.

If you have any question please call the Building Department at 773-6225.

LOCATION **NO. BC-18-_____**

BUILDING PERMIT

PERMIT FOR NEW CONSTRUCTION, ADDITIONS, ALTERATIONS, ETC.

MT. JULIET, TENNESSEE

OFFICE OF BUILDING INSPECTOR

INSPECTIONS REQUIRED

1. FOUNDATION INSPECTION - TO BE MADE AFTER TRENCHES ARE EXCAVATED, FORMS ERECTED AND BEFORE FOUNDATION IS POURED.

2. FRAME INSPECTION - TO BE MADE AFTER THE ROOF, ALL FRAMING, FIRE-BLOCKING AND BRACING ARE IN PLACE AND ALL PIPES, CHIMNEYS AND VENTS ARE COMPLETED. ALL MECHANICAL, PLUMBING, AND ELECTRICAL ROUGH-INS HAVE BEEN INSPECTED AND PASSED.

3. FINAL INSPECTION / CERTIFICATE OF OCCUPANCY - TO BE MADE AFTER THE BUILDING IS COMPLETE AND READY FOR OCCUPANCY. ALL INSPECTIONS ARE COMPLETE.

NOTICE

NO WORK MAY BE DONE ON ANY PART OF A BUILDING OR STRUCTURE BEYOND THE POINT INDICATED BY EACH OF THE INSPECTIONS. THIS PERMIT CARD MUST BE POSTED SECURELY, BE VISIBLE FROM THE STREET AND BE PROTECTED FROM THE WEATHER. REMOVAL, ALTERATION, OR MUTILATION OF THIS SIGN UNTIL COMPLETION OF SUCH WORK IS PROHIBITED.

CALL 773-6225 FOR INSPECTIONS

	BY	DATE
ELECTRICAL IN SLAB		
PLUMBING SLAB		
FOOTING		
SLAB (RADON)		
ELECTRICAL ROUGH-IN	CALL IN THESE 3	
ELECTRICAL LOW VOLTAGE ROUGH-IN	ELECTRICAL	
ELECTRICAL HVAC ROUGH-IN	TOGETHER	
PLUMBING ROUGH-IN	CALL IN THESE	TOGETHER
MECHANICAL	CANNOT BE DONE	UNTIL
GAS	ELEC ROUGH- INS	PASS
FRAME		
INSULATION		
SEWER CONNECTIONS		
WATER CONNECTIONS		
FIRE LINE (As Needed)		
GREASE TRAP - George Page 773-6274		
SERVICE RELEASE		
ELECTRICAL LOW VOLTAGE	CALL IN THESE 3	
ELECTRICAL HVAC	ELECTRICAL	
ELECTRICAL FINAL	TOGETHER	
LIFE SAFETY	JAMIE LUFFMAN - (615) 566-7571	
STORMWATER FINAL	MUST BE DONE BEFORE BLDG	
BLOWER DOOR / DUCT BLASTER TEST	MUST BE DONE BEFORE BLDG	
BUILDING FINAL	CALL IN THESE	TOGETHER
MECHANICAL FINAL		
PLUMBING FINAL		

Notice

To: All Builders, Developers, and Contractors

From: City of Mt. Juliet, Building Department

RE: Stocking of Insulation and Drywall

Please be advised that the City of Mt. Juliet requires that all residential and commercial buildings have the following inspections to be passed:

- Plumbing
- Mechanical / Gas
- Electrical Rough
- Low Voltage Rough
- HVAC Rough
- Frame

All of the above inspections have to be passed before you can stock any insulation and drywall.

If you have any question please call the Building Department at 773-6225.

Notice

To: All Builders – Developers, and Contractors

From: City of Mt. Juliet, Building Department

RE: Closed and Occupied Homes without a Certificate of Occupancy

---

Please be advised that it is the City of Mt. Juliet policy that any homes that are closed and occupied before a Certificate of Occupancy is issued you will have to bond all of your future homes with the City of Mt. Juliet.

If you have any question please call the Building Department at 773-6225.

Notice

To: All Builders – Developers & Contractors

From: City of Mt. Juliet, Building Department

RE: All inspections must to be completed before Final inspection

---

Please be advised that **ALL** inspections must be completed before the Final inspection is done. Failure to do so may result in that **NO** Certificate of Occupancy will be issued.

If you have any question please call the Building Department at 773-6225.

Notice

To: All Builders, Developers, and Contractors

From: City of Mt. Juliet, Building Department

RE: Driveways

This notice is to inform you that City Zoning Ordinance 9-106.3 #3 minimum clearances states that new driveways must be back from signalized intersections **(50 feet)**.

Zoning Ordinance 9-106.5 #2 states, in all zoned districts, no fence, wall, hedge, or other planting or structure that will obstruct vision at any point where any private driveway intersects a public street shall be erected, placed or maintained within thirty-five **(35)** feet in all directions measured from all points along the property line across vehicles are intended to pass.

If you have any questions please call the City of Mt. Juliet Road Inspectors at the Public Works Department (615) 773-7957 or the Building Department at 773-6225.

Notice

To: All Builders, Developers, and Contractors

From: City of Mt. Juliet, Building Department

RE: Sewer and Water lines under driveways

SEWER LINES

Any sewer lines under driveways will be **backfilled with gravel** up to grade level. Any lines under driveways less than 18 inches in depth will be **sleeved and filled with gravel**.

WATER LINES

Any water lines under driveways will be **sleeved and filled with gravel regardless of depth**.

If you have any question please call the Building Department at 773-6225.

Notice

To: All Builders, Developers, and Contractors

From: City of Mt. Juliet, Building Department

RE: Trenching and Backfilling

Piping shall be installed in trenches so that the piping rest on solid and continuous bearing. We will not accept anything less. Piping cannot rest on block, brick, rock, broken concrete and etc. Piping must be bedded properly in ditch.

The trench shall be backfilled to the proper grade with compacted earth, sand, fine gravel, or similar granular material. This type of material is not found in most subdivisions.

Please be advised that this code will be strictly enforced. No exceptions!!!

We are also aware that sometimes there are Safety Issues involved when digging holes to tie into the Sewer Main. If safety is an issue, please call and we will work with you to avoid anyone getting hurt.

If you have any question please call the Building Department at 773-6225.

Notice

To: All Builders, Developers, and Contractors

From: City of Mt. Juliet, Building Department

RE: Concrete sidewalks, driveways, and handicap ramps

Due to numerous recent complaints the City of Mt. Juliet is compelled to re-enforce the following existing regulations; effective immediately – sidewalks, driveways, and handicap ramps must be constructed to conform to the City of Mt. Juliet standard plans:

- Standard Concrete Sidewalks – Detail ST-210
- Parallel Curb Ramp – Detail ST-305
- Residential Concrete Driveway Ramp – Detail ST-313

Particular attention must be given to ensure that dimensions and slopes adhere to those shown. Variances due to site conditions maybe allowed but only with prior approval in writing issued by the City of Mt. Juliet Public Works Department. Failure to comply will result in a **Stop Work Order** related to the violation and/or curtailment of building inspections until the violation is corrected and is in compliance.

Subdivision regulations and standard drawings are available at City Hall and Public Work.

These requirements will be strictly enforced on all residential projects to avoid ongoing problems with unacceptable transitions between sidewalks and driveways, and between sidewalks and ramps.

If you have any question please call the Building Department at 773-6225.

Effective Immediatley

NOTICE - To all Contractors doing work in the City of Mt. Juliet

Clean-out Required on all Sewer Services

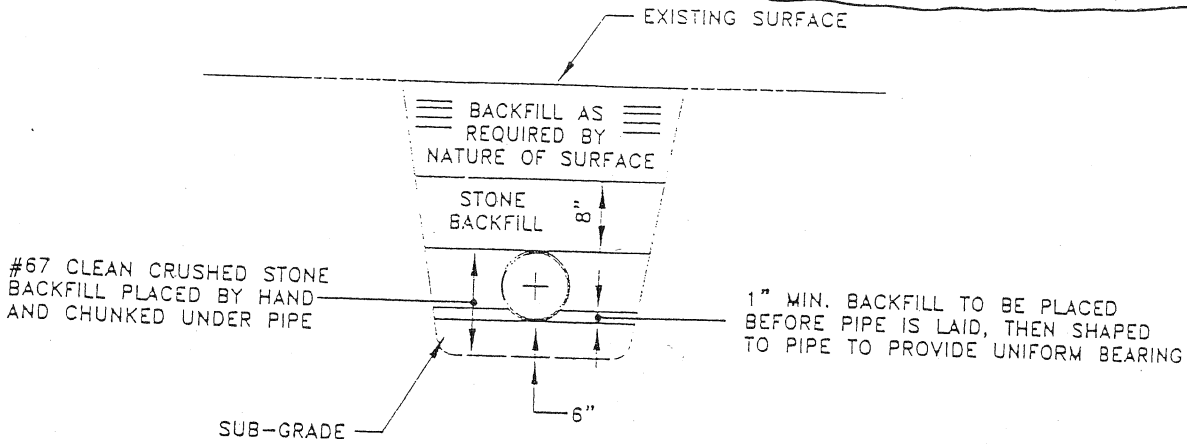

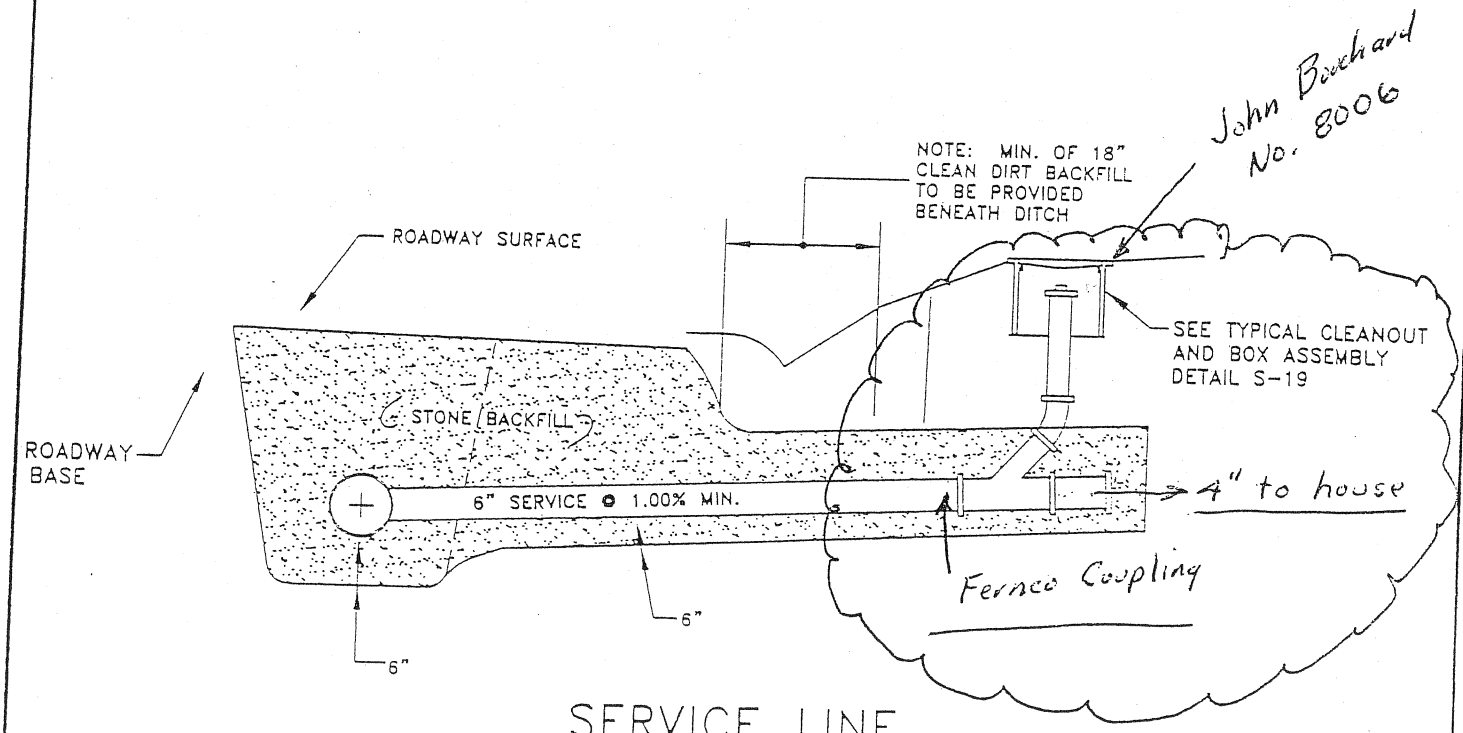

SERVICE LINE

NOT TO SCALE

Clean-out can be 4" Assembly with screw cap.

WMS# 02173

CITY OF MT JULIET, TENNESSEE	STANDARD DETAIL	S4

John Bouchard & Sons Co.

NASHVILLE, TENNESSEE

(615) 256-0112

FAX (615) 256-2427

VALVE BOXES

No. 8003/8004

FOR 4" THRU 12" VALVES

No. 8003

Weight .....56 lbs.

No. 8004

Weight .....76 lbs.

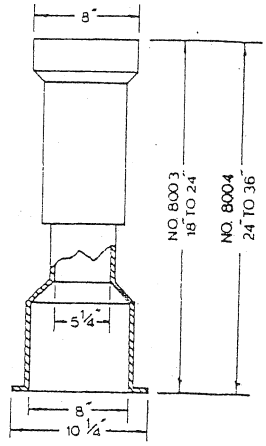

No. 8006

ROADWAY TYPE
NASHVILLE STANDARD

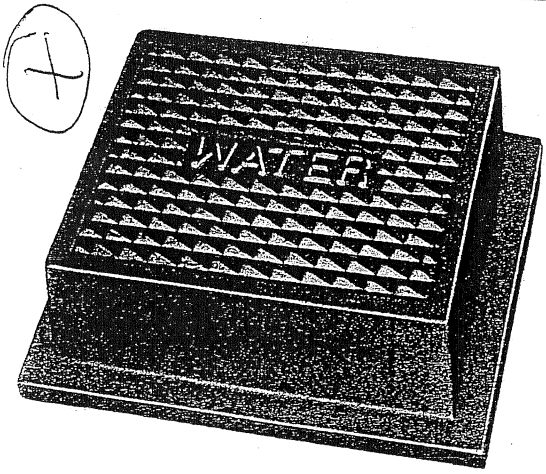

No. 8006
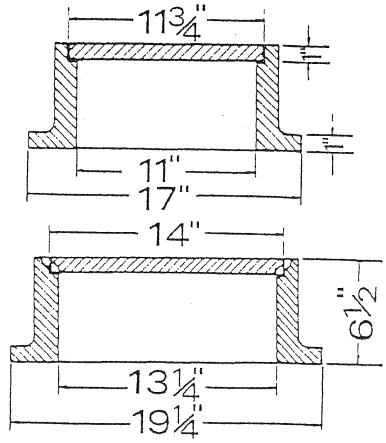
Frame .....150 lbs.
Cover .....45 lbs.
Total.....195 lbs.